

PTI20 SERIES

- Adjustable pressure ranges vacuum to 1,160 psig
- All ranges are user adjustable from vacuum to full scale with standard on board display
- 4 mA to 20 mA HART® optional pressure transmitter
- Accuracy ±0.2% of adusted span
- 4:1 turn down
- All Stainless Steel construction with 316 Stainless Steel wetted parts
- Built to suppress RFI, EMI and ESD

APPLICATIONS

- General industrial
- Pulp & paper
- Water & wastewater
- Power generation
- Food & beverage

SPECIFICATIONS

Output signals	4 mA to 20 mA 2-wire, 4 mA to 20 mA 2-wire with HART®
Adjustable pressure ranges	5 psig to 1,160 psig (All ranges are user adjustable from vacuum to full scale)
Accuracy	0.2% of adjusted span (Turn down 4:1)
Stability	<0.1%/year
Adjustment	By 3 push buttons on display or optional HART® protocol
Response time	<100 ms
Service life	>10 years
Temperature ranges	Media -4 °F to 176 °F (-20 °C to 80 °C) Ambient -4 °F to 158 °F (-20 °C to 70 °C) Flange -4 °F to 212 °F (-20 °C to 100 °C)
Power requirement*	12 Vdc to 36 Vdc
Measuring element	316 Stainless Steel (Hastelloy C or Tantalum optional)
Connection	316 Stainless Steel
Housing material	304 Stainless Steel (316 Stainless Steel optional)
Environmental rating	IP66 (IP68 optional)
Electromagnetic rating	Built to suppress RFI, EMI and ESD protection
Weight	Approximately 3.30 lb. (Depending on process connection)

* Unregulated

⚠ **WARNING:** This product can expose you to chemicals including Nickel, which are known to the State of California to cause cancer and birth defects or other reproductive harm. For more information go to www.P65Warnings.ca.gov.

ORDERING INFORMATION

SERIES	**PTI20**					
ADJUSTABLE PRESSURE RANGES	**5psig**	Min. span 1.45 psi, max. span 5.8 psi (lowest vacuum pressure -5.8 psig)		**145psig**	Min. span 29 psi, max. span 145 psi (lowest vacuum pressure -15 psig)	
	20psig	Min. span 5.8 psi, max. span 23 psi (lowest vacuum pressure -15 psig)		**350psig**	Min. span 87 psi, max. span 350 psi (lowest vacuum pressure -15 psig)	
	55psig	Min. span 14.5 psi, max. span 58 psi (lowest vacuum pressure -15 psig)		**1150psig**	Min. span 290 psi, max. span 1,160 psi (lowest vacuum pressure -15 psig)	
		psig = gauge pressure	All ranges can be user scaled in vacuum or compound.			
ACCURACY	**1**	±0.2% of adjusted span (4:1 turndown)				
OUTPUT SIGNALS	**1**	4 mA to 20 mA, 2-wire	**43**	4 mA to 20 mA, 2-wire with HART®		
PROCESS CONNECTIONS	**8**	1/2" NPT male	**74**	1-1/2" NPT male flush	**77**	2" ANSI 150# Flange
	69	1/2" NPT female	**75**	Threaded flush diaphragm for flange (flange not included)	**78**	3" ANSI 150# Flange
	73	1" NPT male flush	**76**	1-1/2" ANSI 150# Flange	**79**	1" PMC connection
					80	1-1/2" PMC connection
ELECTRICAL CONNECTIONS	**25**	M12 x 1 (4-pin)	**28**	1/2" NPT Female	**71**	PG9 Cable Gland
OPTIONS	**CC**	Certified Calibration	**RMT-10**	Remote Mount Head with 10 ft cable *	**TC**	Transparent Cover (for display)

Please consult your local NOSHOK Distributor or NOSHOK, Inc. for availability and delivery information.

*Custom Lengths Available, Consult Factory

EXAMPLE

PTI20 – 5psig – 1 – 1 – 8 – 28 – CC

Series ..... PTI20 Series
Adjustable pressure range ..... Min. span 1.45 psi, max. span 5.8 psi
Accuracy ..... ±0.2% of adusted span
Output signal ..... 4 mA to 20 mA, 2-wire
Process connection ..... 1/2" NPT Male
Electrical connection ..... 1/2" NPT Female
Option ..... Certified Calibration

UNINSTALLED OPTIONS & ACCESSORIES

PTI-FLANGE-15-150LB	1-1/2" ANSI 150# Flange only	**PTI-15-PMC-WA**	1-1/2" in PMC Weld Adapter
PTI-FLANGE-20-150LB	2" ANSI 150# Flange only	**PTI-PMC-GASKET-15**	PTFE Gasket for 1 1/2" PMC
PTI-FLANGE-30-150LB	3" ANSI 150# Flange only	**PTI-PMC-ORING-1**	FKM O-Rings for 1" PMC
PTI-10-PMC-WA	1" PMC Weld Adapter		

Consult factory for availability.

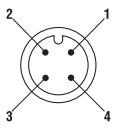

M12x1 (4-Pin)

M12 x 1 (4-PIN) WIRING

1	V+
2	Not used
3	V-
4	Not used

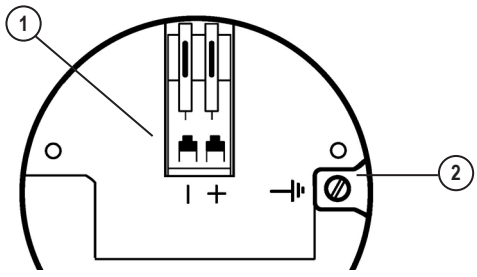

TERMINAL CONNECTION

1	Voltage supply/Output signal (4 mA to 20 mA)
2	Internal Ground

Dimensions

PTI20-8 (1/2" NPT Male)

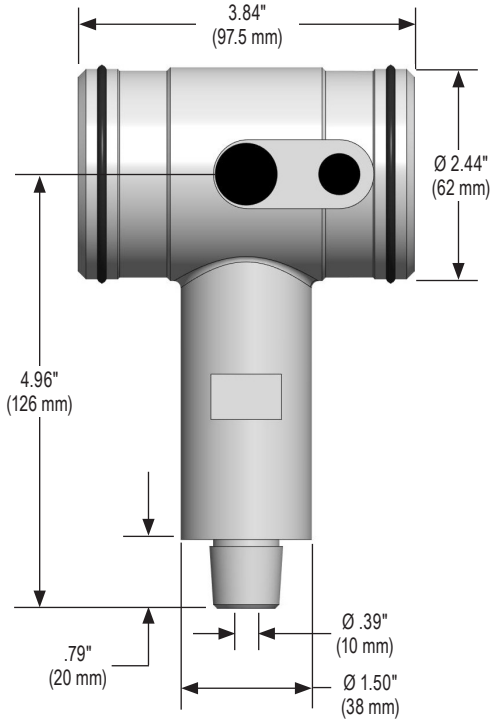

PTI20-69 (1/2" NPT Female)

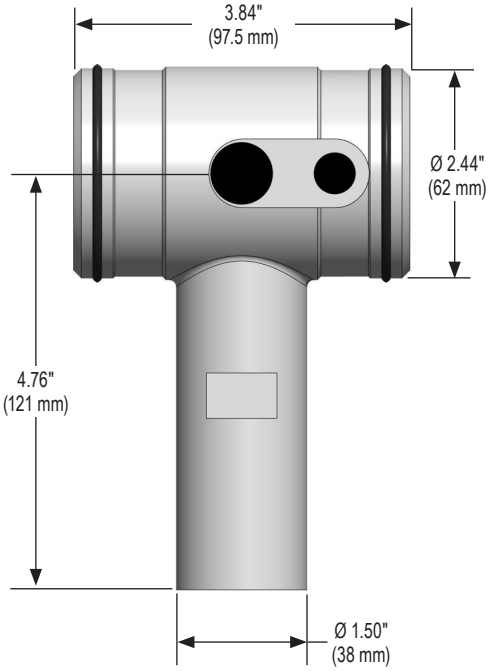

PTI20-73 (1" NPT Male)

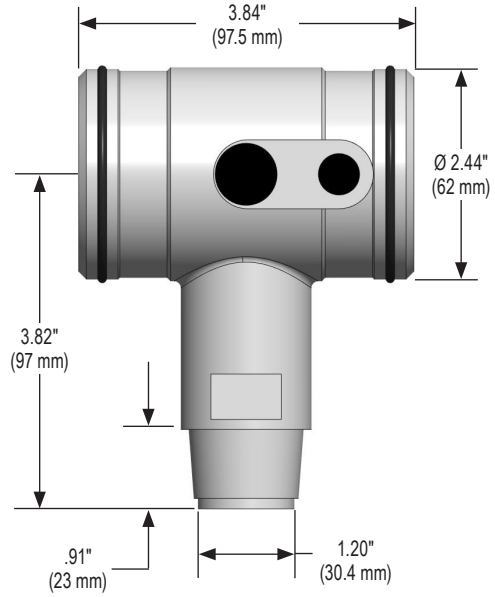

PTI20-76 (Flange)*

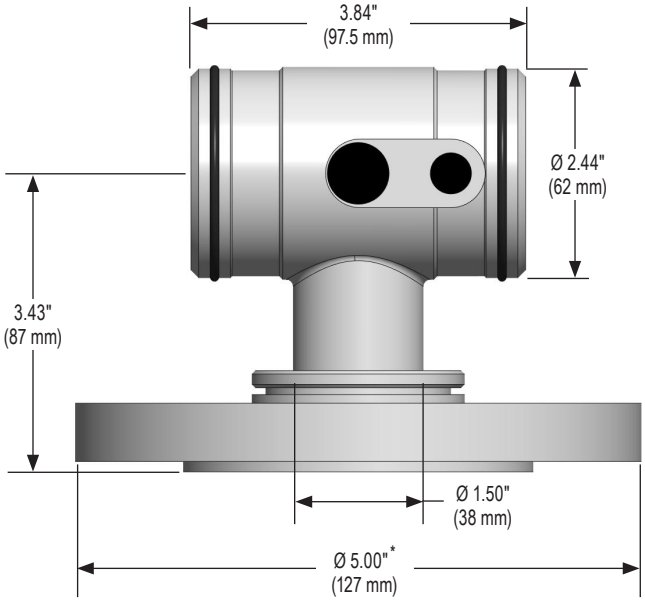

* Dimensions for PTI20-77 (Flange) Ø 6.00" (152 mm)
* Dimensions for PTI20-78 (Flange) Ø 7.50" (190 mm)

PTI20-79 (1" PMC)

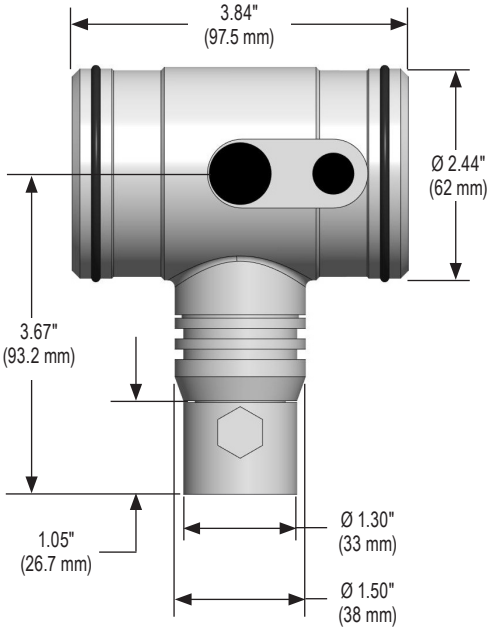

PTI20-80 (1-1/2" PMC)

