Application Note
VCM / PVC Process - pH

Chemical Industry: Polyvinyl Chloride Production

Polyvinyl chloride (PVC) is one of the most common types of plastics. Production of PVC first began in Germany in the early 1930's. Since then, global PVC manufacturing has grown to over 35 million tons annually.

The process starts with creation of a vinyl chloride monomer (VCM). A monomer is really an individual molecule. A polymerization process is used to link the VCM molecules together to form PVC. In this paper we will briefly describe both the VCM and PVC processes and how Barben pH & ORP sensors excel in these difficult applications.

The VCM Process

VCM is a flammable, toxic gas that is the main feedstock of PVC production. The raw materials of VCM are ethylene and chlorine. These two materials combine to form ethylene dichloride which is thermally cracked to create VCM. Ethylene is a byproduct of steam cracking in the refinery. The chlorine typically comes from a chlor-alkali facility located close by (see our paper: *Chlor-alkali_AN_RevA.pdf* for information on this process).

Direct chlorination is the primary process used to create ethylene dichloride (EDC). Ethylene and chlorine are combined with a metallic catalyst (typically $FeCl_3$) to create an exothermic reaction. The reaction is shown below:

$$C_2H_4 + Cl_2 \blacktriangleright C_2H_4Cl_2$$

Crude EDC will go through purification stages to remove traces of HCl, Cl_2, entrained catalyst and residual organics. Purification involves wash and drying cycles followed by distillation. A dilute caustic solution is used in the wash stage to neutralize chlorides and prevent corrosion. Each purification stage generates wastewater in the form of wash water, condensation and cooling water. All wastewater is eventually sent to treatment.

The purified EDC is heated to roughly 500ºC where it is split into VCM and HCl. The reaction is as follows:

$$C_2H_4Cl_2 \blacktriangleright C_2H_3Cl + HCl$$

Most facilities will use a secondary process called oxychlorination. Oxychlorination uses HCl acid to create additional EDC. Recovered HCl is blended with either air or oxygen and ethylene in the presence of a copper salt catalyst (typically $CuCl_2$). The oxychlorination reaction is highly exothermic causing temperatures of 220 - 250ºC. Please see the reaction below:

$$C_2H_4 + 2HCl + 1/2O_2 \blacktriangleright C_2H_4Cl_2 + H_2O$$

After oxychlorination a quench with dilute caustic is used to cool the EDC and neutralize residual HCl. Typically the quality of EDC produced by oxychlorination is not as pure as created from the direct chlorination process; however the creation of additional EDC feedstock and reuse of

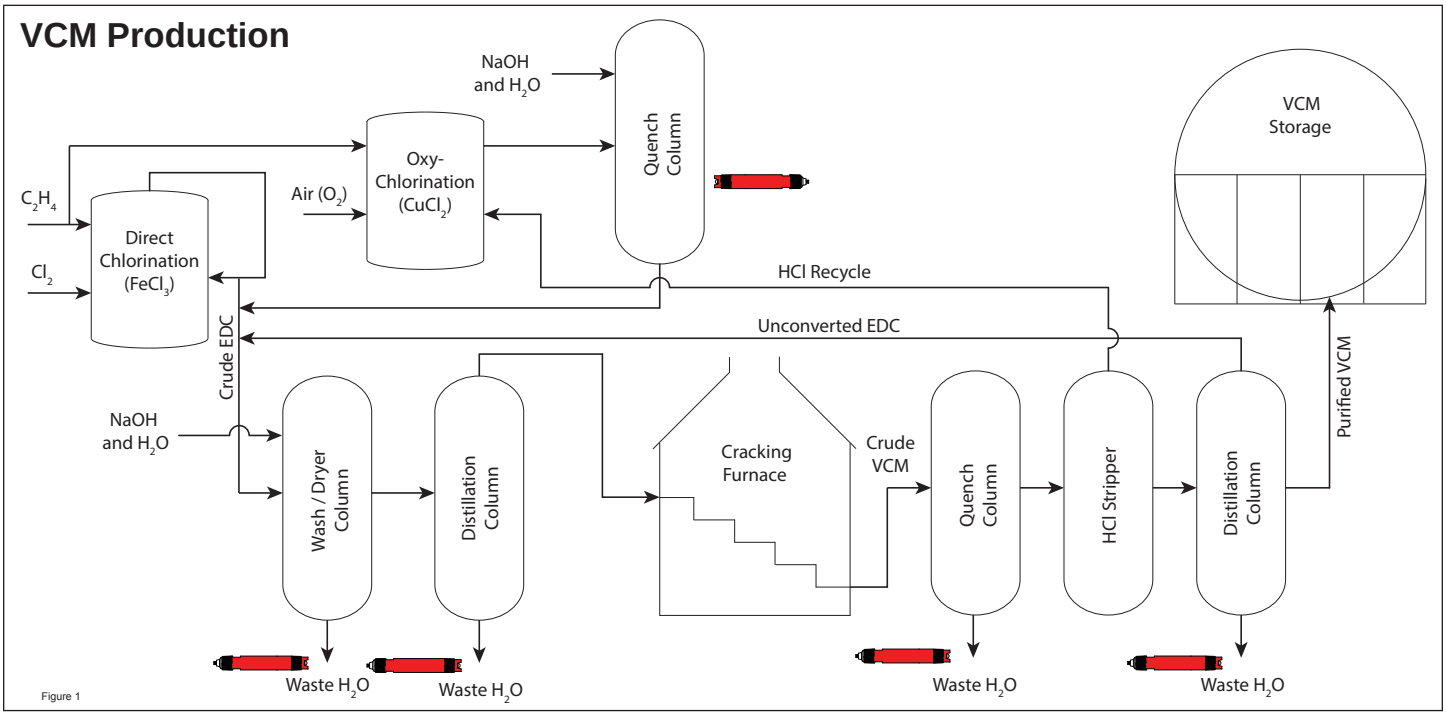

Figure 1

Application Note
VCM / PVC Process - pH

HCl more than outweigh the quality issues. EDC created from the oxychlorination process is routed through the purification stages prior to cracking.

Thermal cracking is a pyrolysis reaction that produces VCM and HCl. Effluent gases are rapidly cooled in the quench tower. If the cooling is not done quickly then further decomposition occurs creating undesirable coke (tar) which can foul the reactor. HCl is stripped off in a separate column for recycle in the oxychlorination process. After a final distillation column the pure VCM is sent to storage where it can be converted to PVC plastic.

The PVC Process (suspension polymerization)
While the VCM process is continuous, the PVC process is based on a batch reaction. VCM and demineralized water are pumped into a pressurized reactor vessel along with initiator chemicals, protective colloids, and a pH buffer. The purpose of each is discussed below.

VCM - Vinyl chloride monomer is converted into polyvinyl chloride when exposed to initiator chemicals in the reactor

Water - Demineralized water provides for the suspension of VCM droplets and PVC granules as well as acts as a heat transfer fluid

Intiators - The initiator reacts with VCM at a prescribed temperature to create long chain PVC molecules.

Protective Colloids - Water soluble colloids influence the size, surface texture, and porosity of the PVC as well as prevent clumping of the granules

pH Buffers - Inorganic salts or bases designed to neutralize HCl acid created by the polymerization process

Once all the batch components have been added to the reactor it is heated to begin PVC formation. The actual reaction is exothermic thus, once started, large quantities of cooling water are required to control the reactor temperature (typically 30 to 80ºC). Over the course of 3 to 10 hours the PVC will precipitate out in the form in small, solid granules of plastic. An agitator is used to keep the VCM and PVC in suspension. The reaction is run until 80 - 90% completion. The resulting PVC slurry is drained from the reactor. Any residual VCM will be stripped off for reuse back into the reactor. All water will be removed through a centrifuge and cyclone dryer. The finished product is a PVC powder with plastic granules ranging from 100 - 150 µm size.

pH Measurement Challenges
The VCM / PVC processes are highly water intensive thus the need for reliable on-line pH and ORP measurements is a primary requirement. pH control is used in the oxychlorination quench tower to neutralize excess HCl to prevent corrosion. Downstream in the PVC process, demineralized water is pH buffered to prevent corrosion in the reactor. Throughout the plant cooling water is used. ORP control of biocide addition is common in the cooling water to prevent bacteria and algae growth. Wastewater is generated by nearly all of the quench and distillation processes throughout production. Considerable amounts of water is also used for cleaning and maintenance purposes. VCM / PVC wastewater has a wide variety of contaminants that must be dealt with:

- Residual EDC and VCM
- Copper and iron catalyst
- PVC granules
- Chlorinated organic compounds
- Glycols
- Coke from the EDC cracking process

Figure 2

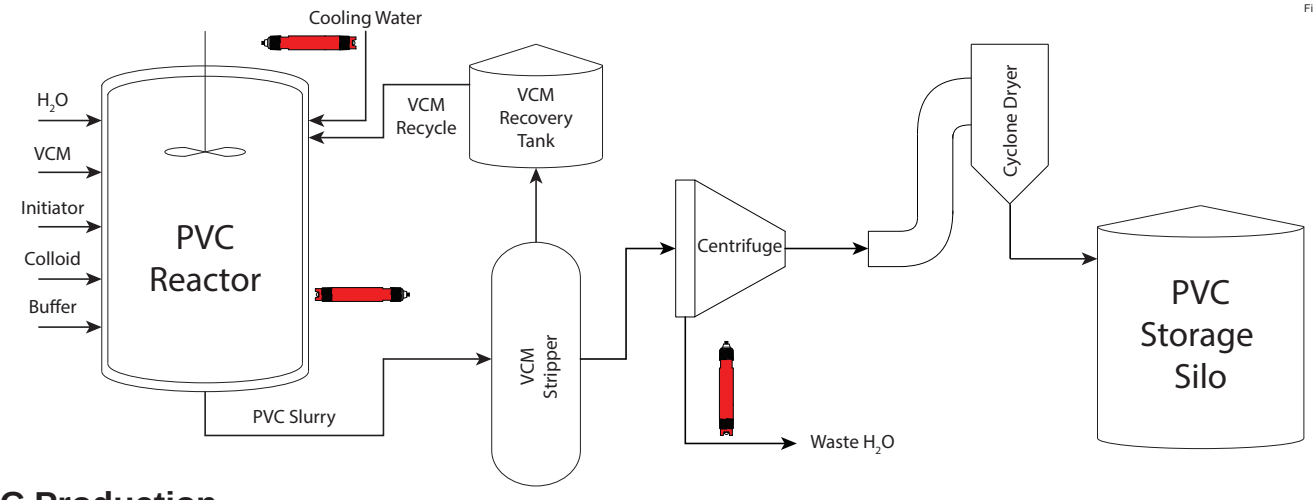

PVC Production

The wastewater chemical mixture is very effective in shortening the lifespan of conventional gel filled double junction pH sensors. Over time, the sensor reference half cell gets contaminated as the chloride and hydrocarbon compounds penetrate the junction and poison the electrolyte and Ag/AgCl reference element. The solid metallic catalyst and PVC particulates also are very effective at plugging the small porous reference junction that is commonplace in many conventional pH sensors.

The end result of chemical contamination and plugging is a shift in pH reading and eventual loss of sensor response to changes in pH.

pH and ORP Solutions

Barben Performance Series pH sensors are specifically designed for harsh chemical processes thus are well suited for the measurement challenges in the VCM / PVC processes. The patented Axial Ion Path® reference half cell (Figure 3) uses multiple filtering chambers to greatly slow the ingress of process chemicals from poisoning the sensor internals. The large annular Teflon junction provides a much greater surface area then conventional pH sensors. The increased area is effective in reducing the plugging due to particulate matter and simplifies cleaning. Because of these design advantages the Barben sensor can be installed directly into the process instead of on a sample line.

Figure 3

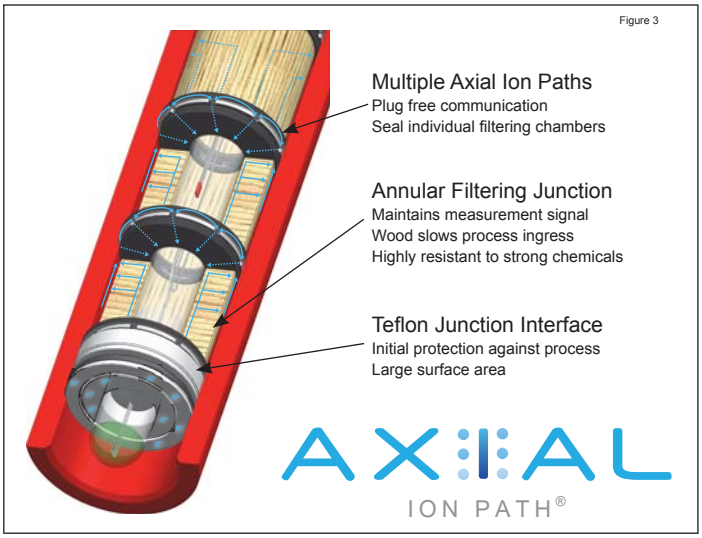

For all VCM / PVC wastewater applications pH sensors should be specified with “CR” coating resistant hemispherical glass electrodes (Figure 4). The coat resistant layer on the glass provides additional insurance against particulate build-up on the electrode. For ORP applications the flat platinum billet electrode should be specified. The flat design provides a large surface area for easy cleaning should scale or coating occur.

pH / ORP Electrode Examples



The top electrode shows a “CR” hemispherical glass pH electrode. The dome shape provides a large surface area and high resistance to cracking when process pressures and temperatures fluctuate. The notches on each side provide added insurance to protect the electrode against impact.

The bottom electrode is Barben’s unique billet style ORP electrode. Unlike most competitive designs, no glass is used in the construction of the sensor thus the design is highly resistant to damage from impact as well as chemical attack. The flush platinum electrode can be easily polished if hard scale coatings occur.

Figure 4

Kynar (PVDF) should be specified as the sensor body material due to it’s chemical compatibility. All Barben pH sensors have options for Viton® Extreme, EPDM, and FFKM (Kalrez) sealing components. Viton® Extreme or FFKM are highly recommended in effluents that contain chloroethanol, chloral, or vinyl chloride.

pH Sensor Installation

If pH measurements are performed on sample lines then the 551 pH sensor with “Nut Lock” Adapter is highly recommended. This style of sensor uses a union nut to lock the sensor in place. The nut tightens down on a flange on the body to hold the sensor in place. The 551 sensor design is an improvement over traditional threaded sensors as it prevents undesirable torque on the cable and sensor body. The “Nut Lock” Adapter can withstand pressures up to 300 PSIG. A wide variety of materials are available including 316 SS, Titanium, Hastelloy, Kynar, CPVC, and PEEK. A typical installation can be seen in Figure 5 below.

Figure 5

551 Sensor with Nut Lock Adapter

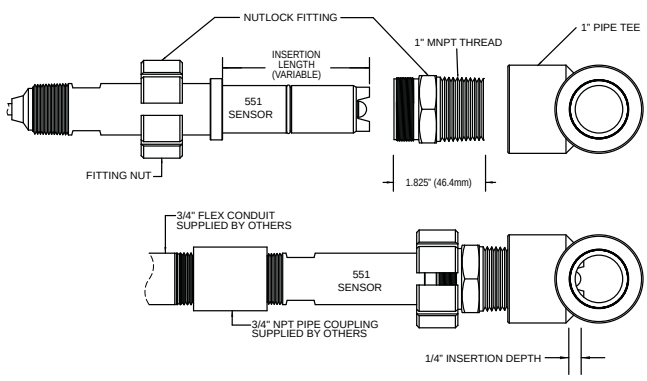

BARBEN ANALYTICAL

Application Note
VCM / PVC Process - pH

Summary
Barben Performance Series pH sensors offer many advantages for VCM / PVC manufacturing facilities including the following:

- Less frequent calibration intervals
- High pH / ORP measurement accuracy
- Increased pH / ORP sensor lifespan
- Simplified sensor specification

In process control applications higher accuracy and reliable pH / ORP measurement leads to savings by reducing chemical usage. Maintenance expenses are also decreased as spares inventory is reduced and fewer calibration hours are required to keep measurements accurate.

Contact Us

Barben Analytical is a leading supplier of analytical measurement technology targeting the industrial marketplace. It is a wholly owned subsidiary of Ametek.

Ametek has nearly 14,000 colleagues at over 120 manufacturing locations around the world. Supporting those operations are more than 80 sales and service locations across the United States and in more than 30 other countries around the world.

Adaptive Industrial Solutions
Sales & Application Support

1015 Grupp Road #31733
St. Louis, MO 63131
Office: (877) 818-5009
Sales@adaptiveind.com
www.adaptiveind.com

Barben Analytical reserves the right to make technical changes or modify the contents of this document without prior notice. We reserve all rights in this document and in the subject matter and illustrations contained within.

Hastelloy® is a registered trademark of Haynes Intl Inc.
Viton® and Kalrez® are registered trademarks of DuPont Dow Elastomers L.L.C.
Kynar® is a registered trademark of Elf Atochem North America Inc.
Teflon® is a registered trademark of E.I. DuPont de Nemours Company Inc.

© 2015, by AMETEK, Inc. All rights reserved • VCM_PVC_AN_RevA • August, 2014