# Vibrating Level Switch



## LSE20 SERIES

- When covered by media, the frequency of the fork decreases and provides a switching function
- Can be used for low or high level detection
- Pressure, temperature, foam will not influence the accuracy
- Can be cleaned-in-place (CIP) or steamed-in-place (SIP)

### APPLICATIONS

- Suitable for all type of liquids
- Provides protection from run dry conditions for pumps, tanks, and pipelines.
- Threaded versions for common industrial applications
- Tri-Clamp versions specialized for food, pharmaceutical and beverage industries

| SPECIFICATIONS | |
|---|---|
| **Insertion length for industrial*** | 3" |
| **Insertion length for sanitary*** | 2-3/8" |
| **Switching output** | PNP/3-wire (Transistor PNP) |
| **Accuracy parameters** | |
| **Switchpoint accuracy** | +/-0.08 inches (+/- 2 mm) |
| **Switch hysteresis** | ≤ 0.12 in (3 mm) |
| **Repeatability** | 0.004 inches (0.1 mm) |
| **Response time** | Covered by media - 0.5 seconds<br>Uncovered by media - 1.0 seconds |
| **Density of media** | 0.018 to 0.09 lbs/in³ (0.5 to 2.5 g/cm³) |
| **Viscosity** | 0.1 to 10,000 mPa s (0.1 to 10,000 cP) |
| **Temperature ranges** | Media: Sanitary -40 °F to 302 °F (-40 °C to 150 °C)<br>Standard -40 °F to 212 °F (-40 °C to 100 °C)<br>High Temp -40 °F to 302 °F (-40 °C to 150 °C) |
| | Ambient: -40 °F to 140 °F (-40 °C to 60 °C) |
| | Storage: -40 °F to 140 °F (-40 °C to 60 °C) |
| **LED status** | Green: Open<br>Red: Closed<br>Flashing Red: Error |
| **Power requirement**** | 10Vdc to 30Vdc |
| **Power consumption** | < 1 W |
| **Operating pressure** | -15 psi to 930 psi |
| **Housing material** | 316L Stainless Steel |
| **Wetted parts** | 316L Stainless Steel, Optional: Hastelloy C-276 |
| **Sanitary wetted parts** | Ra < 30 uin (0.76 um) ASME BPE SF3 |
| **Environmental rating** | M12x1 (4-pin) - IP66/68, DIN Form A - IP65 per IEC 60529 |
| **Electromagnetic rating** | RFI, EMI and ESD protection |
| **Electrical protection** | Protected against reverse polarity, over-voltage and short circuit |
| **Weight** | Approximately 7 oz. |

*Other lengths available, consult factory
** See user manual for detailed specifications

**WARNING:** This product can expose you to chemicals including Nickel, which is known to the State of California to cause cancer. For more information go to www.P65Warnings.ca.gov

| ORDERING INFORMATION | | | | |
|---|---|---|---|---|
| **SERIES** | **LSE20** | Vibrating level switch | | |
| **SWITCH OUTPUT** | **1** | PNP/3-wire (Transistor PNP) | | |
| **PROCESS CONNECTIONS*** | **8** | 1/2" NPT male | **101** | 1-1/2" Tri-Clamp |
| | **18** | 3/4" NPT male | **102** | 2" Tri-Clamp |
| **ELECTRICAL CONNECTIONS** | **8** | DIN EN 175301-803 Form A | **25** | M12 x 1 (4-pin) |

**Please consult your local NOSHOK Distributor or NOSHOK, Inc. for availability and delivery information**

*Other Connections Available, Consult Factory

**EXAMPLE** **LSE20 – 1 – 8 – 25**

**Series** ..... LSE20 Series
**Switch output** ..... PNP/3-wire (Transistor PNP)
**Process connection** ..... 1/2" NPT male
**Electrical connection** ..... M12 x 1 (4-pin)

PNP output
Supply voltage 10 Vdc to 30 Vdc
High Alarm

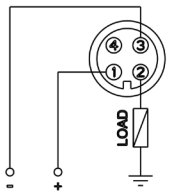


PNP output
Supply voltage 10 Vdc to 30 Vdc
Low Alarm

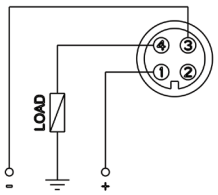


PNP output
Supply voltage 10 Vdc to 30 Vdc
High Alarm

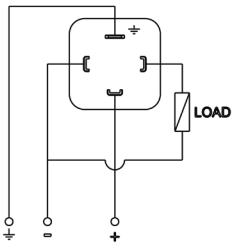


PNP output
Supply voltage 10 Vdc to 30 Vdc
Low Alarm

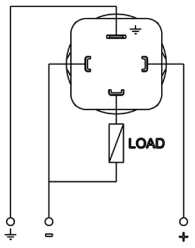

# Dimensions

## LSE20-25 (M12 x 1 (4-pin))

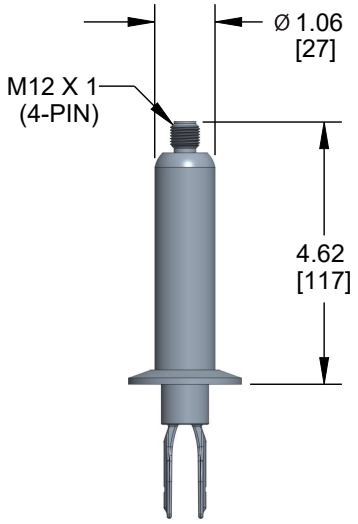


## LSE20-8 (DIN EN 175301-803 Form A)

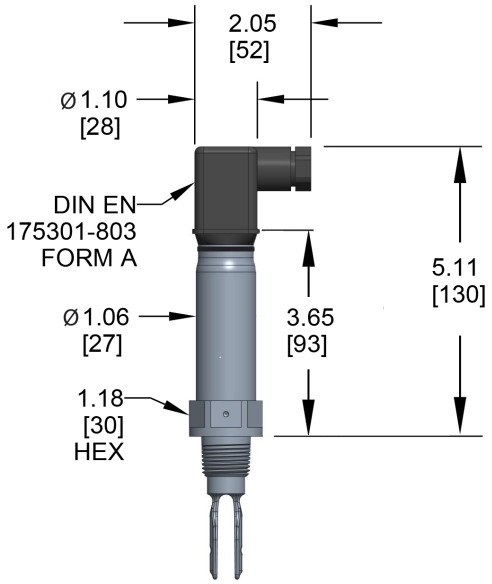


## LSE20 Process Connections

