MODEL WAVE BRIDGE (ST-97) WIRELESS BRIDGE



Warning: Read & understand contents of this manual prior to operation. Failure to do so could result in serious injury or death.

PH. 409-986-9800 FAX 409-986-9880
8621 Hwy. 6 Hitchcock, TX 77563
Website: http://www.rcsystemsco.com

Chapter 1 Safety Information 1
1.1 Safety Information – Read Before Installation and Applying Power 1
1.2 Contacting R.C. Systems Co. Inc. 1
Chapter 2 General Description 2
2.1 Introduction 2
2.2 Ratings and Certifications 2
2.3 System Design Specifications 2
2.4 Antennna Selection and Installation 2
2.4.1 Antenna Transmission Range 2
2.4.2 Antenna Selection and Location 3
2.4.3 Water-proofing Antenna Connections 3
2.4.4 System Grounding 4
Chapter 3 Installation Instructions 5
3.1 Mounting the Enclosure 5
3.2 10-0404-97 ST-97 Display Assembly 5
3.3 10-0463 I/O Power Supply Board 6
3.4 10-0375 RF and 10-0376 rs485 Bridge Boards 7
3.4.1 10-0375 ST-97 RF Bridge Board 9
3.4.2 10-0376 ST-97 RS485 Bridge Board 9
Chapter 4 System Configuration 9
4.1 Menus Database Configuration 9
4.2 Main Menu 11
4.3 Port 1 Radio and Port 2 Radio (ST-97R only) 12
4.4 Contrast Menu 13
4.5 System Security Menu 14
4.6 Radio Mode 14

Chapter 1 Safety Information

1.1 SAFETY INFORMATION – READ BEFORE INSTALLATION AND APPLYING POWER

The following symbols are used in this manual to alert the user of important instrument operating issues:



This symbol is intended to alert the user to the presence of important operating and maintenance (servicing) instructions.



This symbol is intended to alert the user to the presence of dangerous voltage within the instrument enclosure that may be sufficient magnitude to constitute a risk of electric shock.

WARNINGS:

- **Shock Hazard** - Disconnect or turn off power before servicing this instrument.
- **WARNING- EXPLOSION HAZARD**- DO NOT DISCONNECT EQUIPMENT UNLESS POWER HAS BEEN SWITCHED OFF OR THE AREA IS KNOWN TO BE NON-HAZARDOUS.
- Use a properly rated CERTIFIED AC power (mains) cable installed as per local or national codes
- Clean only with a damp cloth without solvents.
- Equipment not used as prescribed within this manual may impair overall safety.

1.2 CONTACTING R.C. SYSTEMS CO. INC.

To contact R. C. Systems Co. Inc., call, fax, email or write:
409–986-9800 FAX 409-986-9880 Email: info@rcsystemsco.com
8621 Hwy. 6 Hitchcock, TX 77563
Or visit us on the World Wide Web: www.rcsystemsco.com

Chapter 2 General Description

2.1 INTRODUCTION

The ST-97 Wireless Bridge is designed to complement our WaveNet client / server wireless products and is offered in two distinct models. The ST-97R functions as a wireless "Repeater" to send / receive wireless signals on one RF network and then send / receive again on another RF network. The two networks may both be 900MHZ, 2.4GHZ or 900MHZ on one and 2.4GHZ on the other. The ST-97M functions as a wireless "Modem" to send / receive signals between an RS-485 port and a wireless 900MHZ or 2.4GHZ RF network. Both models may function as either client or server and are equipped with a Fault relay to indicate an "out of range" server and loss of power. When combined with RC Systems Modbus protocol products Modbus is the protocol used on all ports. However, ST-97s work with any protocol and does no protocol conversion.

- Offered in two models as either ST-97R REPEATER or ST-97M MODEM
- ST-97R is equipped with 2 radios assigned to different networks. Signals received on one radio are retransmitted on second
- ST-97M is equipped with one radio and an RS-485 port. Bidirectional data is bridged between the RS-485 port and the radio's RF link
- Standard fail-safe relay warns of "Server Out of Range" and power loss

2.2 RATINGS AND CERTIFICATIONS

ENCLOSURE
Instrument enclosure suitable for Class 1, Division 1 and 2, Groups A, B, C and D

2.3 SYSTEM DESIGN SPECIFICATIONS

DISPLAY
128x64 pixel LCD, LED Backlight for menu navigation and unit setup.

AMBIENT TEMPERATURE RANGE
-40 – 60 degrees C

POWER SUPPLY
10 - 30 VDC at 10 Watts max

2.4 ANTENNNA SELECTION AND INSTALLATION

2.4.1 ANTENNA TRANSMISSION RANGE

The distance radio signals can travel is dependent upon several factors including antenna design, transmitter power and Free-space losses. In order for a wireless link to work, the available system operating margin (TX power - RX Sensitivity + Antenna gains) must exceed the Free-space loss and all other losses in the system. For best RF line-of-site, the combined height of both antennas must exceed the Fresnel zone diameter (see below).

Dist. between ant's	Fresnel zone diameter	Free-space loss (dB)
1000 ft. (300 m)	16 ft. (4.9 m)	81
1 Mile (1.6 km)	32 ft. (9.7 m)	97
5 miles (8 km)	68 ft. (20.7 m)	110
10 miles (16 km)	95 ft. (29 m)	116

Example:

The RF radio modem has the following parameters:

- Maximum RF TX power setting = 30 dBm (1 Watt)
- RF RX sensitivity = -100 dBm (this is a constant)
- Antenna gain (standard equipped dipole) = 2.1dBi x 2 = 4.2dBi

So the system operating margin is 30 - (-100) + 4.2 = 134.2 dBm. This is enough to transmit 10 miles if free-space was the only loss in the system. For this to be the case, the antennas must be mounted with a combined height greater than 95ft above all obstructions (including the ground) to keep the Fresnel zone clear. In practice however, there are many losses in the system besides just free-space and it is recommended there be at least 20dB extra system operating margin.
RF “Rules of Thumb”

- Doubling the range with good RF “Line of Site” (LOS) requires an increase of 6 dB.
- Doubling the range without good RF LOS requires an increase of 12 dB.

2.4.2 ANTENNA SELECTION AND LOCATION

A site survey using an RF spectrum analyzer and test radios is highly recommended.
The location of the antenna is very important. Ensure the area surrounding the proposed location is clear of objects such as other antennas, trees or power lines which may affect the antenna’s performance and efficiency. It is also vital that you ensure the support structure and mounting arrangement is adequate to support the antenna under all anticipated environmental conditions. The choice of appropriate mounting hardware is also important for both minimizing corrosion and maintaining site intermodulation performance.

Most 900MHZ installations utilize locally mounted 1000-2189 dipole antennas, and most 2.4GHz installations utilize the 1000-2300 Rubber 7dBi collinear antenna. However, there are also Yagi antennas available for both frequencies (1000-2310 for 900MHz and 1000-2309 for 2.4GHz), and a Fiberglass 8dBi Collinear antenna (10-0289) is available for 900MHz.

2.4.3 WATER-PROOFING ANTENNA CONNECTIONS

Water-proof all outdoor coax connectors using a three layer sealing process of initial layer of adhesive PVC tape, followed by a second layer of self-vulcanizing weather-proofing tape such as 3M 23 (1000-2314) with a final layer of adhesive PVC tape.

1. Attach antenna to RP-TNC fitting	2. Wrap 20-24" strip PVC electrical tape onto hub, nut and base of antenna.	3. Wrap 20-24" strip 3M 23 tape (1000-2314) onto PVC tape.	4. Wrap 24-28" strip PVC electrical tape over all.
			

Figure 2-1 Water-proofing Antenna Connections

2.4.4 SYSTEM GROUNDING

Direct grounding of the ST-97 enclosure via a good electrical connection to a well-designed grounding system is essential. This will protect your system, reduce damage that can occur during lightning strikes and reduce noise.

Chapter 3 Installation Instructions

3.1 MOUNTING THE ENCLOSURE

The ST-97 standard enclosure is a cast aluminum explosion-proof (NEMA 7) enclosure as shown in Figure 3-1.

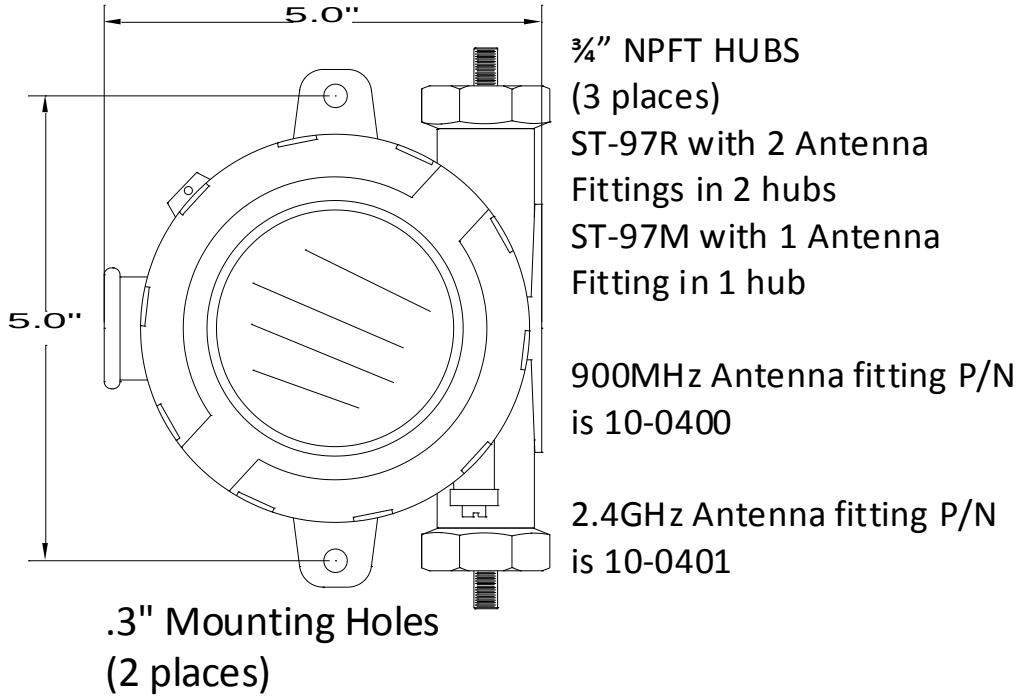

Figure 3-1 ST-97 Explosion Proof Enclosure



WARNING: Qualified personnel should perform the installation according to applicable electrical codes, regulations and safety standards. Ensure correct cabling and sealing fitting practices are implemented. Install the ST-97 to a wall or bracket using the predrilled mounting flanges with I.D. 0.25 on 5 inch centers (Figure 3-1). If conduit is rigid and able to support the weight of the ST-97, the mounting bolts may be omitted.

3.2 10-0404-97 ST-97 DISPLAY ASSEMBLY

Modular design simplifies the installation of the ST-97. A top Display Assembly is mounted with captive thumbscrews and is easily removed to access field-wiring terminals.

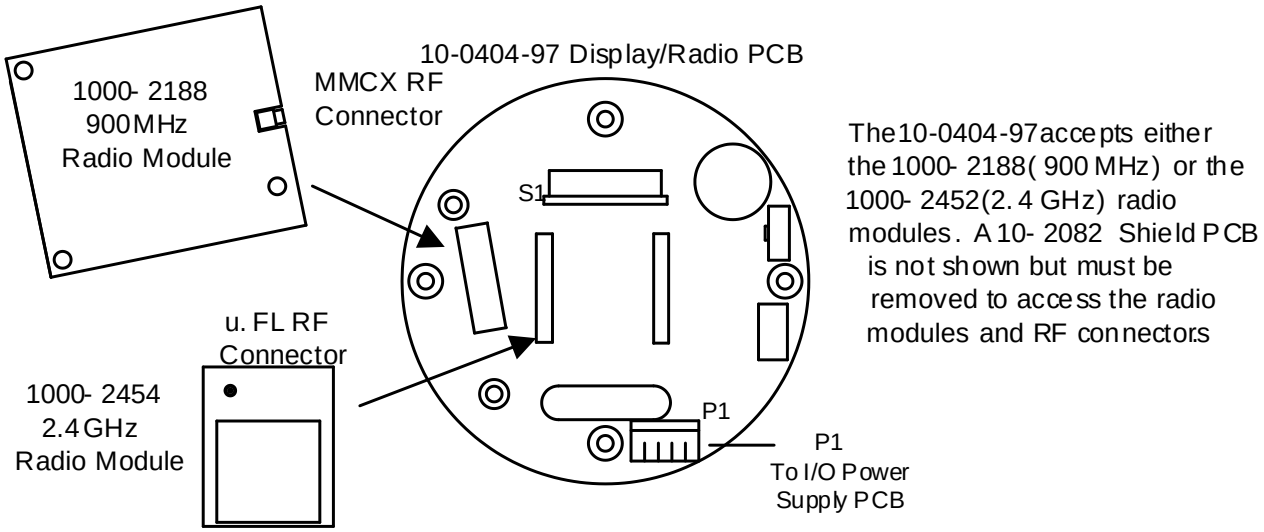

Figure 3-2 10-0404-97 Display/Radio PCB

3.3 10-0463 I/O POWER SUPPLY BOARD

The bottom 10-0463 I/O Power Supply board generates voltages needed for LCD, relays, RS-485 port and/or radios. 10-30VDC must be applied to TB2 in order to power the ST-97.

CAUTION: Alarm relays have dry contacts and power must be supplied from an external source. If this power source exceeds 3 amps users should consider fusing relay wiring with 3 amp fuses. Contacts are rated for RESISTIVE loads! Inductive loads, such as contactor coils or motors, may cause contact arcing, which shortens life and emits RFI into the sensor signals. Use appropriate arcing snubbers and MOV's across inductive loads and keep wiring away from signal wires.

Relay terminals are labeled NO (normally open), NC (normally closed) and COM (common). These designators correspond to the shelf, or de-energized, state of the relays.

AC or DC power supplies to relays on the 10-0425 Power Supply/Relay PCB must be the same for each relay. Example: 24VDC should not be the power switched by one relay and 115VAC by others.

The K5 Relay is a failsafe relay. This relay will remain energized unless there is a loss of communication with the server or a loss of power to the unit. Power to the TB3 terminals may be tied to the 10-30VDC from TB2 to ensure common power and ground.

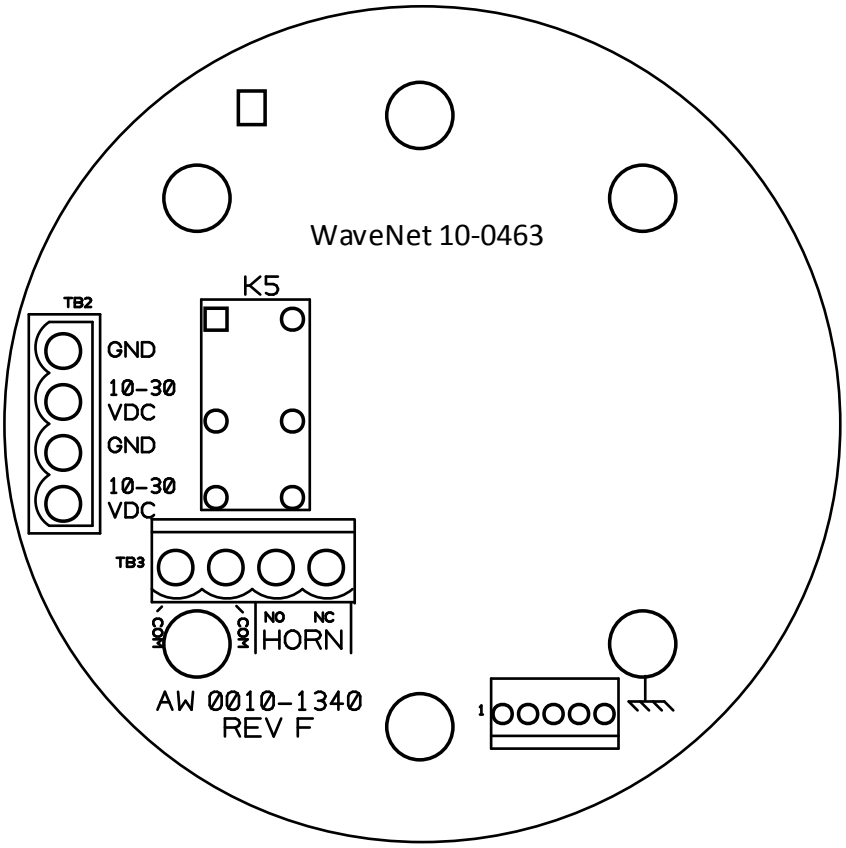

Figure 3-3 10-0463 I/O Power Supply Board

3.4 10-0375 RF AND 10-0376 RS485 BRIDGE BOARDS

The 10-0375 ST-97 RF Bridge Board or 10-0376 ST-97 RS485 Bridge Board is installed piggy backed to the Display Assembly for easy access to the Port 2 radio module (10-0375) or the RS-485 terminals (10-0376).

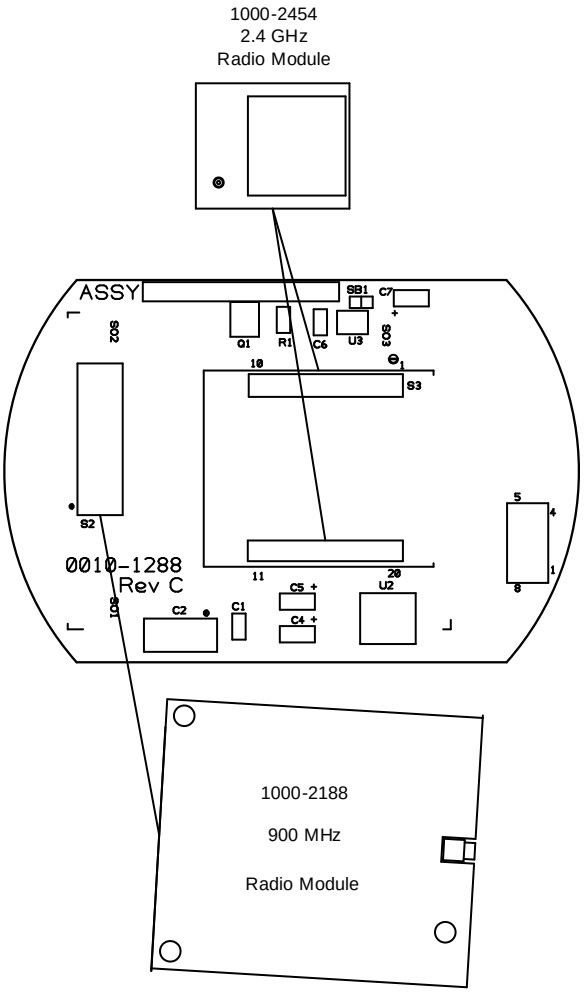

Figure 3-4 ST-97 Bridge Board Showing 10-0375 Radio Module Connections

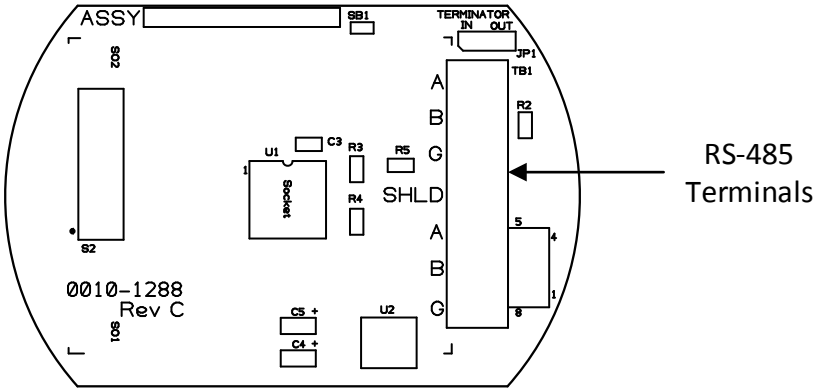

Figure 3-5 Bridge Board Showing 10-0376 Modbus Connection Terminals

3.4.1 10-0375 ST-97 RF BRIDGE BOARD

The ST-97 RF Bridge Board contains connections for both the 1000-2188 900MHz and 1000-2454 2.4GHz Radio Modules, which can be used for Port 2 radio communication.

3.4.2 10-0376 ST-97 RS485 BRIDGE BOARD

The ST-97 RS485 Bridge Board provides terminals for connecting RS-485 wiring in place of Port 2 communications.

Chapter 4 System Configuration

4.1 MENUS DATABASE CONFIGURATION

All ST-97 configuration variables are stored in its non-volatile menu database. Upon installation, many menu items will contain default values from the factory and require changes to better match a user's particular application. ST-95 menus may be configured from the magnetic keypad in just a few minutes per channel. The configuration menus trees are shown in Figure 4-1 (ST-97R) and Figure 4-2 (ST-97M) and each menu's description follows.

Note: The Radio Setup Menus for the ST-97R and ST-97M are identical. However, there are two different modes, WaveNet and Legacy, which will be discussed in Sections 4.3 and 4.6. For simplicity of viewing the Menu Trees, WaveNet mode is shown in Figure 4-1 and Legacy mode is shown in Figure 4-2.

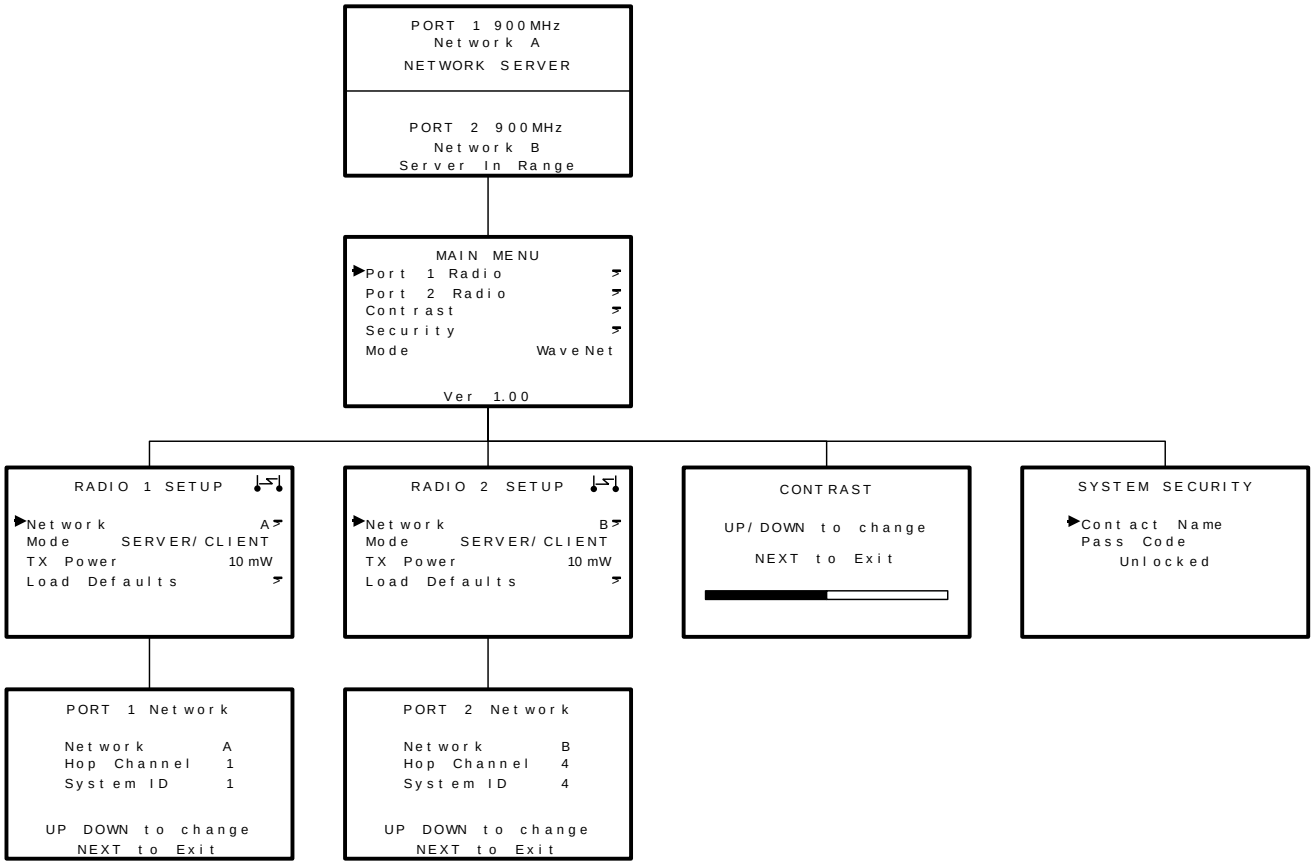

Figure 4-1 ST-97R Menu Tree

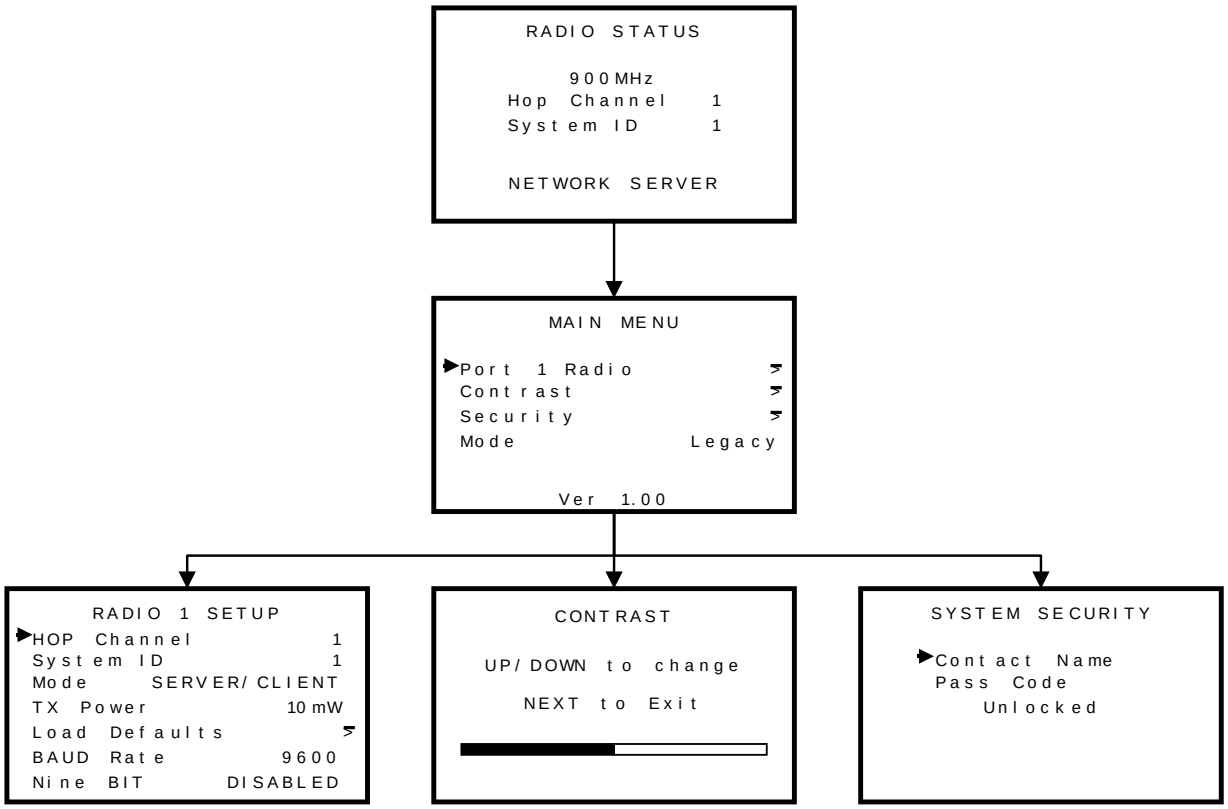

Figure 4-2 ST-97M Menu Tree

4.2 MAIN MENU

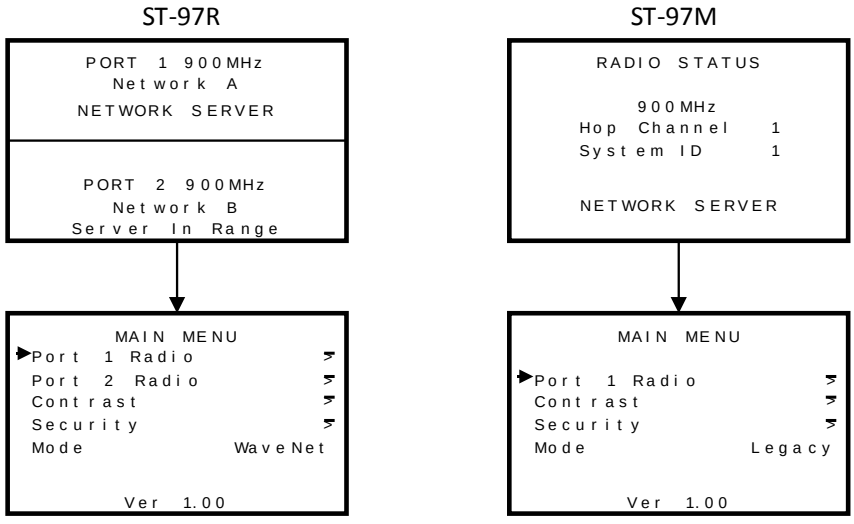

Figure 4-3 ST-97R and ST-97M Main Menu

4.3 PORT 1 RADIO AND PORT 2 RADIO (ST-97R ONLY)

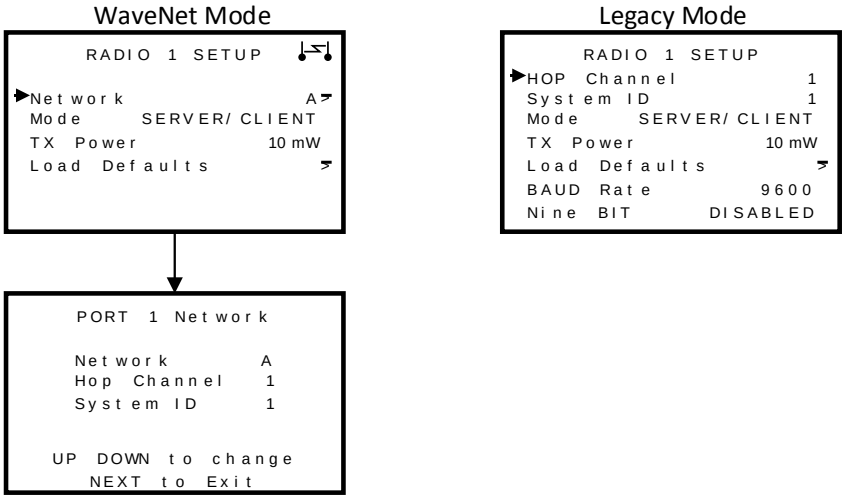

Figure 4-4 Radio Menus

Note: Port 2 Radio Menu is only available in ST-97R models.

4.3.1 WAVENET MODE

Note: Only one WaveNet device may be configured as the **Server** per WaveNet network.

WaveNet devices utilize the **Network ID** setting to assign up to 26 unique hopping patterns. To simplify system setup, **Network ID** is entered using letter designators "A" through "Z" where A = [Hop Channel 1, System ID 1] and Z = [Hop Channel 26, System ID 26]. A WCM will not indicate Server In-Range status or communicate with any WaveLink Receiver (WLR), ST-97 and/or WaveNet Relayer (WNR) operating on a different **Network ID**. This feature allows multiple WaveNet wireless systems to be located within range of each other without interference.

Networks M through Z are encrypted networks. When one of these networks is selected the data will be encrypted via proprietary methods to ensure that only devices on that network, which hold the encryption key, will be able to decipher the data being transmitted.

IMPORTANT! If an encrypted network is selected, both radios must be set to different encrypted networks. The ST-97 does no protocol conversion therefore encrypted data coming in /out on one network will still be encrypted on the other.

IMPORTANT! Explore what frequencies are appropriate for the final location of any wireless system.

2.4GHZ used in EU countries: Hop channels on 2.4 GHZ models may be set between 1 and 26. Hop channels A-R include EU "low band" frequencies 2406 – 2435MHZ. Hop channels S-Z include EU "high band" frequencies 2444 – 2483.5MHZ.

4.3.2 LEGACY MODE

When using an ST-97 with other R. C. Systems controllers, such as the ST-90, ST-71, Rig Protector or other legacy type controllers, it is necessary to operate wirelessly in Legacy Mode. ST-72 Controllers shipped after 2016 are compatible with WaveNet Mode and do not require the Legacy Mode settings.

Once in Legacy mode it is necessary to enter the appropriate **Hop Channel** and **System ID** in accordance with your **Server's Network Configuration**. All other ST-97 settings function as discussed in this section.

4.3.3 TX POWER

Note: ***TX Power (900MHz)*** menu settings are available to improve communications reliability by increasing the power of wireless broadcasts.

TX Power (900MHz models only) may be set for 10mW, 200mW, 400mW and 1W (EIRP based upon a 2 dBi antenna). The maximum **TX Power** setting is 30db (1 watt), and each time TX power is reduced by half, antenna transmit power is reduced by 3dB.

2.4GHZ variation: The TX Power menu is not available in 2.4GHZ models and is fixed at 125mW conducted.

4.3.4 BAUD RATE

This setting allows the user to set the data rate of the communication port. The options include **9600, 19200, 38400, 57600 and 115200.**

4.4 CONTRAST MENU

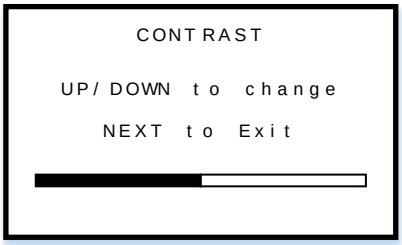

Figure 4-5 Contrast Menu

The Contrast Menu allows the user to adjust the LCD contrast for ambient lighting conditions and user preference. Swipe the UP key to darken the display contrast, and swipe the DOWN key to lighten the display contrast.

4.5 SYSTEM SECURITY MENU

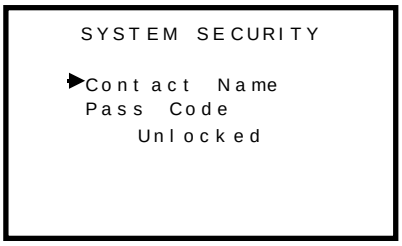

Figure 4-6 Security Menu

The System Security Menu allows locking of all configuration variables by requiring a 4-digit Pass Code prior to altering menus. Contact Info is a 15 character ASCII field available for displaying a phone # or name of personnel in possession of the Pass Code. Lost Pass Codes may be recovered by entering the locked System Security Menu, and holding the UP key for 5 seconds, at which time the 4-digit Pass Code will appear at the bottom of the screen.

4.6 RADIO MODE

WaveNet Mode should be selected when using the ST-97 within a WaveNet System which utilizes the WaveLink Receiver as the server.

Legacy Mode should be selected when using one of R.C. Systems' Legacy type controllers, e.g. ST-72 and ST-71, as the server.

In some installations, it may be desirable to make the ST-97 the server. If its location is more central to all radios in the network or is in range of units that are out of range of other nodes.

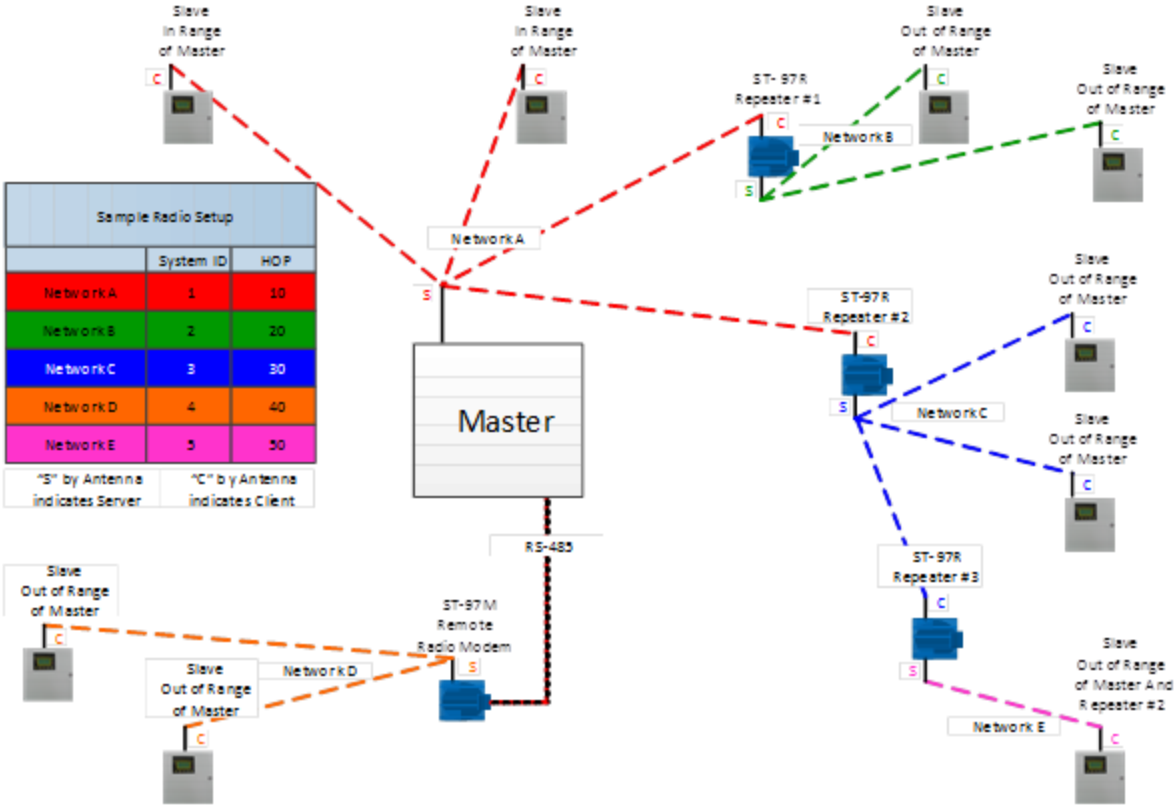

Figure 4-7 Example ST-97M and ST-97R Configurations

Figure 4-7 shows a number of scenarios in which the ST-97 may be used. All five networks in this figure are being polled over Modbus from a single Master unit utilizing wireless Modbus and wired Modbus.

Network A is attempting to get information from seven other controllers. From the top left of the diagram, the first two controllers are within range and are utilizing the wireless Modbus protocol. The next two are out of range of the Master, so an ST-97R is being used to "Bridge" the units to the Master. In this instance the ST-97 has one radio configured as a client on the Master's network (Network A) which would be in either WaveNet or Legacy mode depending on the type of Master controller, and the second radio configured as a Server on Network B in either WaveNet or Legacy mode depending on the type of controllers which are out of range. Now, the Master's Modbus queries reach across Network A, pass through the ST-97 out to the out-of-range clients on Network B and back to the Master. Note: The ST-97 does not read or interpret any of the data over Modbus, it is simply a pass-through device to extend the range, switch frequencies or switch from wired to wireless (or vice versa) communication.

Repeater #2 works in the same way as Repeater #1 utilizing Network C, and using a second repeater (Repeater #3) to even further expand the reach to a remote Slave unit over Network E.

Network D is used with an ST-97 utilizing the wired connection from the Master, and converting it to wireless using the ST-97 to reach two out-of-range units.