LOW-COST OEM PRESSURE TRANSDUCER



Model BR1002/1003-CA
Low-Cost OEM Pressure Transducer

MODEL BR1002/1003-CA

FEATURES:

- Available ranges from 0 to 15 PSI thru 0 to 10K PSI (1,034 mBAR to 689 BAR)
- Choice of mV/V, Vdc & 4-20 mA output
- Rugged, welded, stainless steel construction
- High proof pressure
- Economically priced

APPLICATIONS:

- Automotive
- Industrial OEM
- On-board vehicle
- Compressor controls
- Pneumatic/hydraulic controls
- Pump controls

PRODUCT OVERVIEW:

The Model BR1002/1003-CA from Blue Ribbon Corp is a family of lower cost, industrial grade OEM pressure transducers, featuring corrosion-resistant, all stainless steel wetted parts and housings. Series transducers are ideal for higher volume pressure monitoring applications, particularly where lower costs are required, yet where the need for precision measurement accuracy remains. Units are available with choice of 4-20 mA, 0 to 5 Vdc or 0 to 10 Vdc output, as well as various electrical connection and pressure port options. Typical applications for the Model BR1002/1003-CA include off-road vehicle, HVAC/R, hydraulic and pneumatic control systems, pumps and compressors, and industrial engine pressure monitoring.

FIELD OPTIONS:

- Vdc & 4-20 mA
- Alternate connectors & pressure ports

© 2018 Blue Ribbon Corp. **Adaptive Industrial Solutions**
sales@adaptiveind.com | (877) 818-5009

LOW-COST OEM PRESSURE TRANSDUCER

DIMENSIONAL DRAWING

All dimensions are in inches (mm)

STANDARD WIRING

PIN	MODEL 1002	MODEL 1003
A	+EXC	+EXC/SIG
B	+SIG	N/C
C	N/C	N/C
D	-EXC/SIG	-EXC/SIG
E	N/C*	N/C*
F	N/C*	N/C*

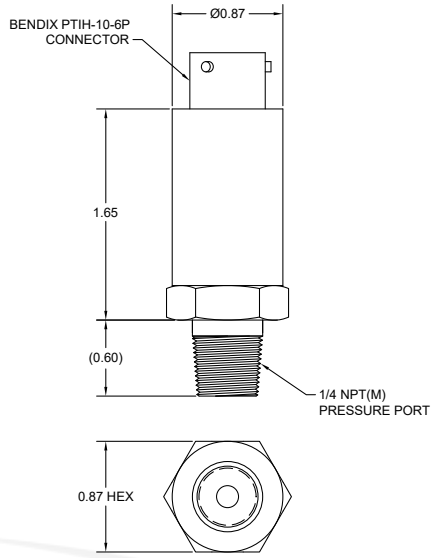

REFERENCE SPECIFICATIONS

ELECTRICAL

- **Supply Voltage:** 9 to 32 Vdc
- **Output Signal:**
  (1002) 0 to 5 Vdc, 0 to 10 Vdc optional
  (1003) 4-20 mA
- **Load Resistance:** 3.5 mA nominal 6 mA max.
- **Response Time:** <5 ms
- **Connection:** PTIH-10-6P Bendix connector

STATIC ACCURACY (BFSL) (HYSTERESIS, NON-LINEARITY & REPEATABILITY @ +70 °F)

Standard: ±0.5% FSO
Improved: ±0.2% FSO or ±0.1% FSO
Zero & Span Balance: ±1.0% FSO @ +70 °F

MATERIALS OF CONSTRUCTION

- **Wetted Parts:** 316 stainless steel and 17-4 stainless steel
- **Housing:** 316 stainless steel

MECHANICAL

- **Process Connection:** ¼" NPT (M) standard (options available)
- **Proof Pressure:** 1.5X FSO
- **Burst Pressure:** 3X FSO or 17,500 PSIG (1,207 BAR), whichever is less
- **Weight:** <4 oz (113 g)

PRESSURE RANGES

- 0 to 15 thru 0 to 10K PSI (1,034 thru 689 BAR), gauge, vacuum, and absolute pressure reference available

THERMAL SPECIFICATIONS

- **Compensated:** 0 °F to +180 °F (-17.7 °C to +82 °C)
- **Operating Temperature:** -40 °F to +180 °F (-40 °C to +82 °C)
- **Storage:** -40 °F to +250 °F (-40 °C to +121 °C)
- **Effect on Zero/Span:** <±2.0% FSO/100 °F

All specifications are for reference purposes only. In the interests of continuous product improvement, all specifications are subject to change without notice. Please contact Blue Ribbon Corporation for assistance with your application.

© 2018 Blue Ribbon Corp.
Adaptive Industrial Solutions
sales@adaptiveind.com | (877) 818-5009