CORROSION RESISTANT LEVEL TRANSMITTER



Model BR313G
Corrosion Resistant Level Transmitter
(Shown with PTFE Cable)

MODEL BR313G

FEATURES:

- Chemically resistant PVDF construction
- Bullet nose with ceramic sensing element
- 0 to 3 PSI thru 0 to 700 PSI (7 feet WC thru 1640 FTWC)
- PTFE jacketed vented cable
- IP68 rating to 700 PSI (1640 FT)

APPLICATIONS:

- Corrosive chemical tank level
- Water tank and reservoir level
- Process plant water level
- Ground water reclamation

PRODUCT OVERVIEW:

The Model BR313G utilizes an all PVDF housing (titanium housing optional) with ceramic sensing element to provide a highly corrosion resistant level sensor. This series provides reliable performance in hazardous environments with aggressive chemicals for years of trouble free service.

FIELD OPTIONS:

- Additional lengths of Teflon jacketed cable
- 0-5Vdc output

© 2016 Blue Ribbon Corp. **Adaptive Industrial Solutions**
sales@adaptiveind.com | (877) 818-5009

CORROSION RESISTANT LEVEL TRANSMITTER

DIMENSIONAL DRAWING

All dimensions are in inches (mm)

STANDARD WIRING

WIRE	MODEL 313G
RED	+EXC/SIG
YEL	-EXC/SIG
BLU	GND
WHT	N/C
SHIELD	OPEN

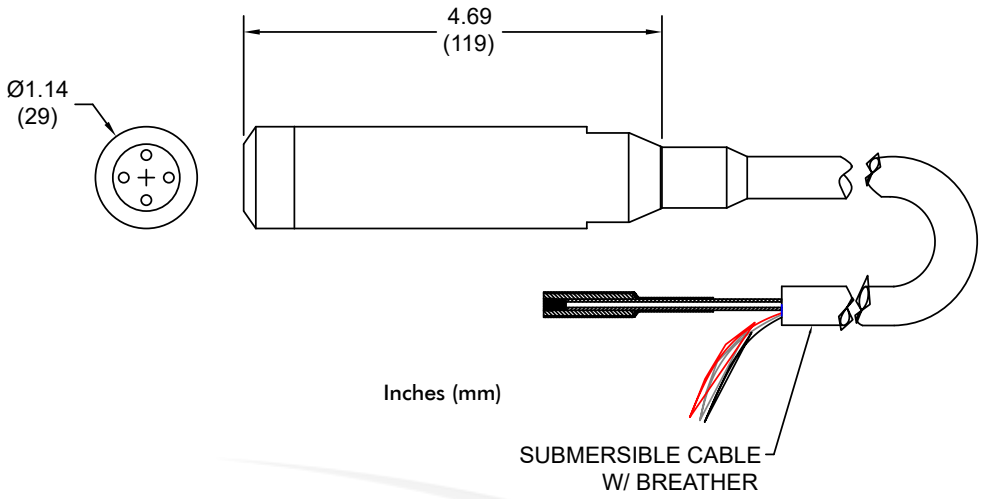

REFERENCE SPECIFICATIONS

ELECTRICAL

- **Output Signal:**
  Model 313G: 4-20 mA
  Model 213G: 0 to 5 Vdc
- **Supply Voltage:** 12 to 36 Vdc
- **Response Time:** <5 ms

MATERIALS OF CONSTRUCTION

- **Housing Assembly:** PVDF, Titanium optional
- **Sensor Diaphragm:** Ceramic (other options available, consult factory)
- **O-Ring Seal:** FKM Fluorocarbon rubber
- **Cable:** Teflon jacketed cable with integrated vent tube and hydrophobic filter

STATIC ACCURACY (BFSL): Non-Linearity @ +70 °F

Standard: ±0.5% FSO
Improved: ±0.25% FSO

MECHANICAL

- **Proof Pressure:** 2X FSO
- **Burst Pressure:** 3X FSO
- **Weight:** >1.0 lbs (680 g)
- **Diameter:** 1.14" (29 mm)

PRESSURE RANGES

- 0 to 3 PSI thru 0 to 700 PSI (207 mBAR thru 48 BAR)
- 0 to 6.5 FTWC thru 0 to 1640 FTWC (2 mWC thru 500 mWC)

THERMAL SPECIFICATIONS

- **Compensated:** 15° F to +168 °F (-10 °C to +76 °C)
- **Operating Temperature:** -40 °F to +185 °F (-40 °C to +85 °C)
- **Storage:** -40 °F to +212 °F (-40 °C to +100 °C)
- **Effect on Zero/Span:** <±1.4% FSO/100 °F

All specifications are for reference purposes only. In the interests of continuous product improvement, all specifications are subject to change without notice. Please contact Blue Ribbon Corporation for assistance with your application.

© 2016 Blue Ribbon Corp.
Adaptive Industrial Solutions
sales@adaptiveind.com | (877) 818-5009