HOT WATER THERMOMETER



Model BRHW
Hot WaterThermometer



Model BRHW-SW
Hot Water Thermometer
with Socket Weld Thermowell

MODEL BRHW

FEATURES:

- An economical and accurate means to measure air or water temperatures
- Separable thermowell with optional sweat well
- Bimetallic element
- Dual scale (Fahrenheit & Celsius)
- Easy to install
- ½" NPT Connection
- 1 year warranty
- Lead Free available

SPECIFICATIONS:

- 2.5" dial (63mm), aluminum case
- Glass lens
- ½" NPT Connection
- Bi-metallic sensing element
- Recalibrator Standard
- Accuracy: ±1

Part Number	Temp. Range	Connection
BRHW	30 to 250 °F	½″ NPT
BRHW-SW	30 to 250 °F	¾″ Sweat Well
BRHW-LF	30 to 250 °F	½″ LFNPT
BRHW-SWLF	30 to 250 °F	¾″ LF Sweat Well

© 2016 Blue Ribbon Corp. **Adaptive Industrial Solutions**
sales@adaptiveind.com | (877) 818-5009

DIMENSIONAL DRAWING

All dimensions are in inches (mm)

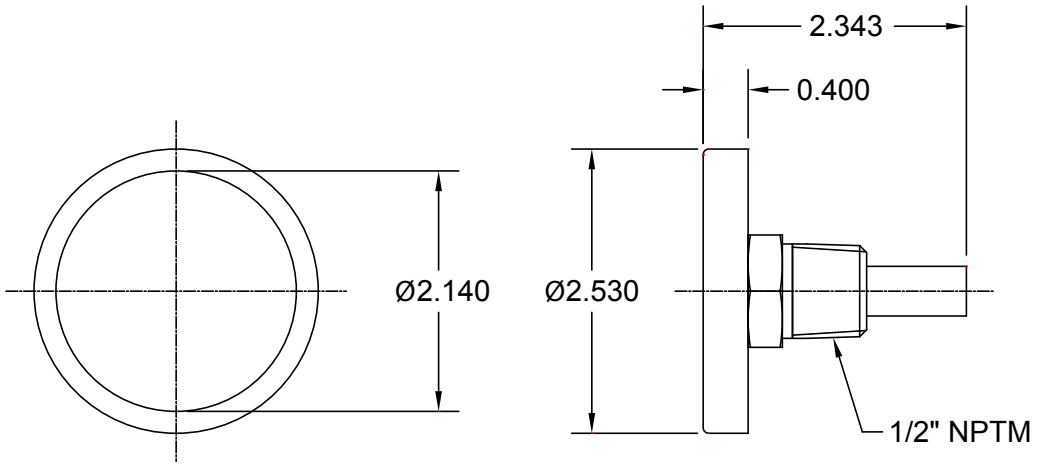

BRHW

2.5" hot water thermometer

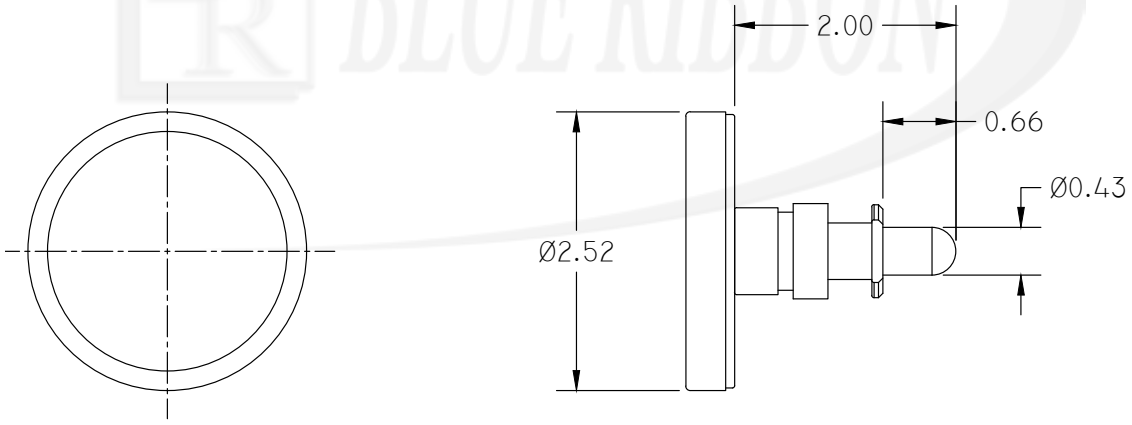

BRHW-SW

2.5 HOT WATER THERM

All specifications are for reference purposes only. In the interests of continuous product improvement, all specifications are subject to change without notice.
Please contact Blue Ribbon Corporation for assistance with your application.

© 2016 Blue Ribbon Corp. **Adaptive Industrial Solutions**
sales@adaptiveind.com | (877) 818-5009