Submersible CE

NOSHOK



612 SERIES

- Ranges from 0 inH_2O to 50 inH_2O through 0 psig to 1,000 psig
- Current and voltage outputs available
- 316 Stainless Steel, polyamide and polyurethane wetted parts
- CE compliant to suppress RFI, EMI and ESD

APPLICATIONS

- Irrigation
- Tank monitoring
- Water & wastewater
- Well head measurement

SPECIFICATIONS	
Output signals	4 mA to 20 mA, 2-wire; 0 Vdc to 5 Vdc and 0 Vdc to 10 Vdc, 3-wire; 0.5 Vdc to 2.5 Vdc, 3-wire
Pressure ranges	0 inH_2O to 50 inH_2O through 0 psig to 1,000 psig
Accuracy	± 0.25% full scale (BFSL); optional ± 0.125% full scale (BFSL); (includes the effects of non-linearity, hysteresis, non-repeatability, zero point and full scale errors)
Stability	≤ ± 0.2% full scale for 1 year, non-accumulating
Response time	≤ 1 ms (between 10% and 90% full scale)
Service life	> 100,000,000 load cycles
Temperature ranges	Compensated 32 °F to 122 °F/0 °C to 50 °C Effect ± 0.01%/ °F for zero and span Media 14 °F to 122 °F / -10 °C to 50 °C Storage -22 °F to 175 °F/-30 °C to 80 °C
Power requirement*	10 Vdc to 30 Vdc (4 mA to 20 mA, 2-wire, 0 Vdc to 5 Vdc, 3-wire) 5 Vdc to 30 Vdc (0.5 Vdc to 2.5 Vdc, 3-wire) 14 Vdc to 30 Vdc (0 Vdc to 10 Vdc, 3-wire)
Load limitations	≤ (VPower-10)/0.020 Amp for 4 mA to 20 mA ≥ 10,000 Ω for 0 Vdc to 10 Vdc, 3-wire ≥ 5,000 Ω for 0 Vdc to 5 Vdc, 3-wire
Proof pressure	2 times range
Burst pressure	4 times range
Measuring element	Cap: Polyamide, 316 Stainless Steel with weighted nosecone Cable: Polyurethane, optional FEP or PVC with double water block
Connection	316 Stainless Steel
Housing material	316 Stainless Steel
Environmental rating	IP68
Electromagnetic rating	CE compliant to EMC norm EN 61326 RFI, EMI and ESD protection
Electrical protection	Reverse polarity protection, short circuit and optional lightning protection per EN 6100-4-5; 1.5J
Shock	100 g's according to IEC 60068-2-27
Vibration	15 g's according to IEC 60068-2-6
Weight	Approximately 7 oz. with standard nosecone - cable extra

* Unregulated

⚠ **WARNING:** This product can expose you to chemicals including Lead and Nickel, which are known to the State of California to cause cancer and birth defects or other reproductive harm. For more information go to www.P65Warnings.ca.gov

Adaptive Industrial Solutions | sales@adaptiveind.com | (877) 818-5009

ORDERING INFORMATION

SERIES	**612**							
PRESSURE RANGES	**50 inH$_2$O**	0 inH$_2$O to 50 inH$_2$O	**2**	0 psig to 2 psig (4.6 ftH$_2$O)	**20**	0 psig to 20 psig (46.2 ftH$_2$O)	**200**	0 psig to 200 psig (461.3 ftH$_2$O)
	100 inH$_2$O	0 inH$_2$O to 100 inH$_2$O	**3**	0 psig to 3 psig (6.9 ftH$_2$O)	**25**	0 psig to 25 psig (57.7 ftH$_2$O)	**300**	0 psig to 300 psig (692.5 ftH$_2$O)
	150 inH$_2$O	0 inH$_2$O to 150 inH$_2$O	**5**	0 psig to 5 psig (11.5 ftH$_2$O)	**30**	0 psig to 30 psig (69.2 ftH$_2$O)	**350**	0 psig to 350 psig (807.9 ftH$_2$O) *
	200 inH$_2$O	0 inH$_2$O to 200 inH$_2$O	**10**	0 psig to 10 psig (23.1 ftH$_2$O)	**60**	0 psig to 60 psig (138.5 ftH$_2$O)	**500**	0 psig to 500 psig (1154.2 ftH$_2$O) *
	400 inH$_2$O	0 inH$_2$O to 400 inH$_2$O	**15**	0 psig to 15 psig (34.6 ftH$_2$O)	**100**	0 psig to 100 psig (230.8 ftH$_2$O)	**750**	0 psig to 750 psig (1733.3 ftH$_2$O) *
	psig = gauge pressure	Other ranges available on request			**150**	0 psig to 150 psig (346.3 ftH$_2$O)	**1000**	0 psig to 1,000 psig (2311.0 ftH$_2$O) *
ACCURACIES	**1**	±0.25% full scale (BFSL)			**2**	±0.125% full scale (BFSL)***		
OUTPUT SIGNALS	**1**	4 mA to 20 mA, 2-wire			**5**	0 Vdc to 10 Vdc, 3-wire		
	2	0 Vdc to 5 Vdc, 3-wire			**11**	0.5 Vdc to 2.5 Vdc, 3-wire		
PROCESS CONNECTIONS	**N**	Nosecone			**W**	Nosecone w/added weight (1.1 lb.)		
	T	G 1/2 B x 1/2″ NPT male with 1/4″ NPT female						
ELECTRICAL CONNECTIONS	**XX**	Standard polyurethane (PUR) cable			**38-XX**	Optional FEP cable		
	22-XX	Optional water-blocked PVC cable (>200 psi only)						
		NOTE: XX = length of cable in feet.						
OPTIONS	**PT1**	PT100 RTD **	**CBC**	Cable Clamp	**FE**	Filter Element		
	DC	Desiccant Cartridge	**LP**	Lightning Protection **	**JB**	Cable Junction Box		

Please consult your local NOSHOK Distributor or NOSHOK, Inc. for availability and delivery information.

* Only available with 4-20 mA output
** Not available for FEP/PVC cable or Water-Block PVC cable
*** Only available for ranges ≥ 5 psi

EXAMPLE

612 – 5 – 1 – 1 – N – 50

Series ..... 612 Series
Pressure range ..... 0 psig to 5 psig
Accuracy ..... ±0.25% full scale (BFSL)
Output signal ..... 4 mA to 20 mA, 2-wire
Process connection ..... Nosecone
Electrical connection ..... 50' of submersible polyurethane cable



Weighted nosecone

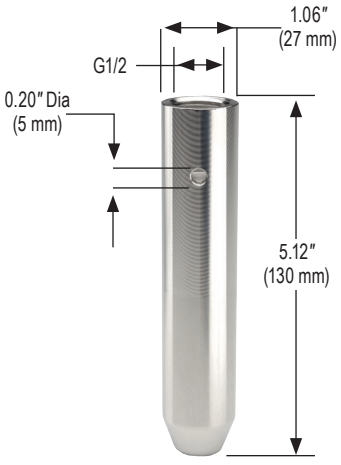

NPT adapter

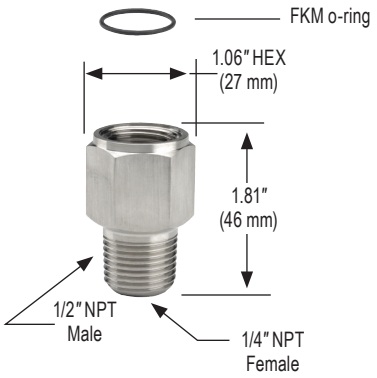

612 Series Wiring	4 mA to 20 mA		
CONNECTION TYPE (CODE)	V+	V-	CASE GROUND
PUR Cable	Brown	Green	Gray
FEP Cable	Brown	White	Blue

612 Series Wiring	0-5 Vdc, 0-10 Vdc, 0.5 to 2.5 Vdc			
CONNECTION TYPE (CODE)	V+	COMMON	OUTPUT	CASE GROUND
PUR Cable	Brown	Green	White	Gray
FEP Cable	Brown	Green	White	Gray

Load Limitations 4 mA to 20 mA output		
Vmin	=	[10V + (.020 x RL)] - RC
RL	=	RS + RW
RL	=	Loop resistance (Ω)
RS	=	Sensor resistance (Ω)
RW	=	Wire resistance (Ω)
RC	=	0.0435 x cable length (ft.)