KING-GAGE

A NOSHOK Company

Food & Beverage , Chemical Processing, Pulp & Paper, Water/Wastewater and General Industrial



Liquid Level Measurement

www.king-gage.com

System Component Selection



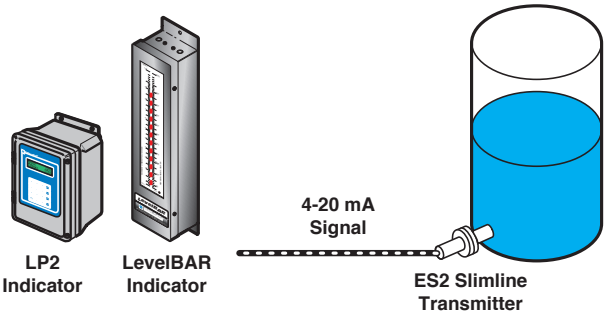

ELECTRONIC PRESSURE TRANSMITTER SYSTEM

Pressure sensor provides two wire 4–20 mA output to indicator. Level is based on hydrostatic pressure due to depth. LP2 digital indicator or LevelBAR indicator provides 24 Vdc excitation power for sensor. Requires 100-240 Vac for operation.

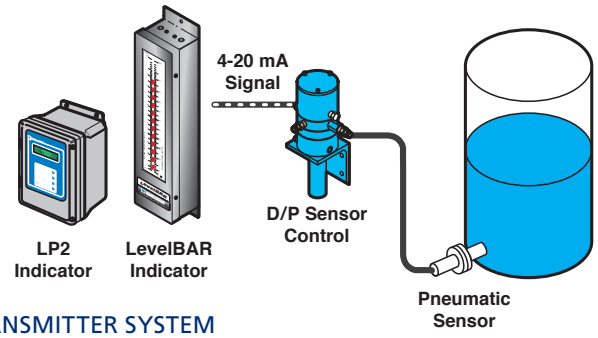

D/P TRANSMITTER SYSTEM

Combines pneumatic sensor with integrated transmitter (D/P Sensor Control) providing 4–20 mA output. Compressed air is required for sensor operation. For complete system add LP2 digital indicator or LevelBAR indicator.

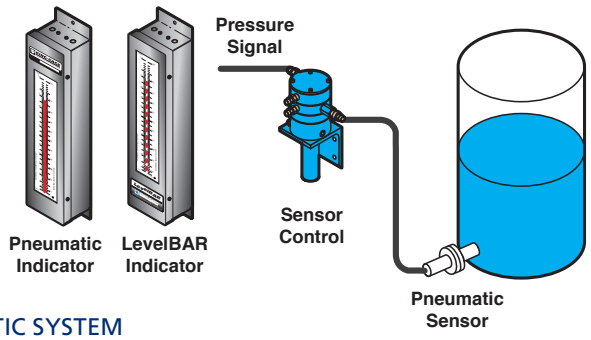

PNEUMATIC SYSTEM

Pneumatic sensor with air controller (Sensor Control) generates pressure signal to indicator. Requires compressed air supply for operation. LevelBAR indicator has 100-segment LED, 4–20 mA output (requires 100-240 Vac).

Liquid Level Systems

KING-GAGE, A NOSHOK Company designs and manufactures KING-GAGE liquid level measurement and inventory tank gauging systems. We provide application specific solutions for the process industries.

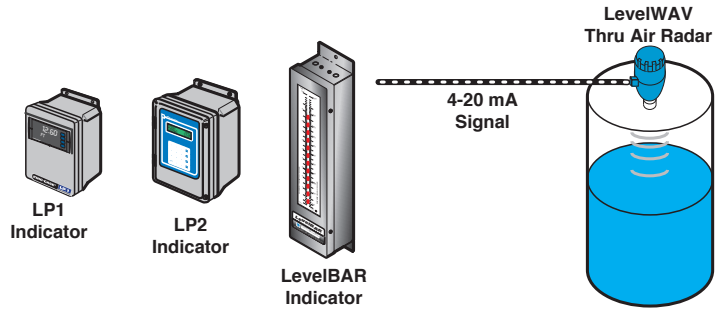

NON-CONTACT RADAR LEVEL SYSTEM

Transmitter sends microwave pulses down into the tank to detect level with 4–20 mA output proportional to depth. LP1 digital indicator or LevelBAR indicator provides 24 Vdc excitation power for sensor. Requires 100-240 Vac for operation.

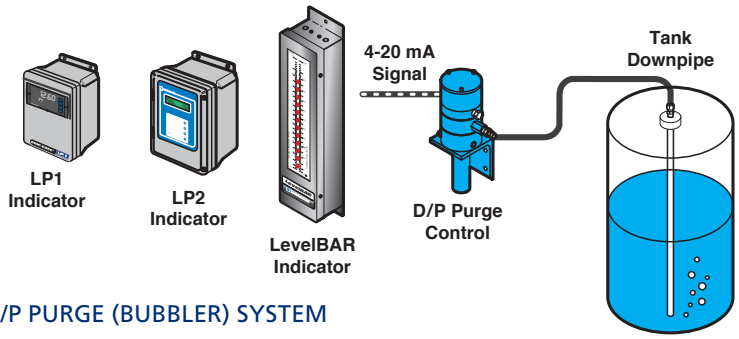

D/P PURGE (BUBBLER) SYSTEM

Precision airflow controller with integrated D/P transmitter (D/P Purge Control) provides 4–20 mA output proportional to depth. Requires compressed air supply. LP2 digital indicator or LevelBAR indicator displays tank level.

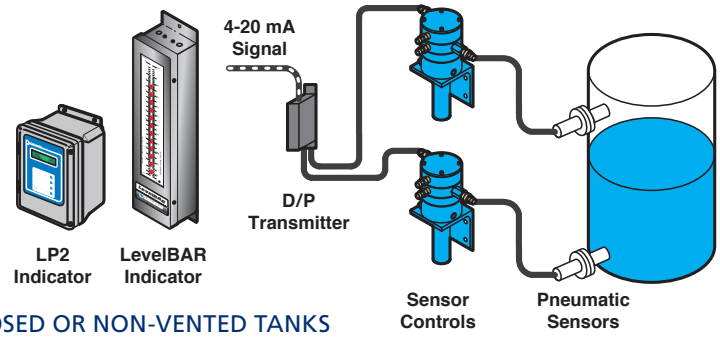

CLOSED OR NON-VENTED TANKS

Requires measuring both the liquid pressure and vapor pressure. Upper and lower sensor output is routed to D/P (differential pressure) transmitter. Tank level is displayed on LP2 digital indicator or LevelBAR indicator.

Application Assistance

When specifying a system, it is important to consider the type of process and nature of the liquid product (i.e., corrosive, viscous, food grade, etc.). Many of the components outlined in this catalog are particularly suited for certain applications. More detailed product specifications and application assistance are available from KING-GAGE or your local King Distributor.

Table of Contents

Tank Level Indicators 4–5

Liquid Level Transmitters 6–8

Mounting Shells and Adapters 7

Bubbler Gauges 9

Compressed Air Filters 10

Applications, Support and Industries Served 11

Limited Warranty - KING-GAGE, A NOSHOK Company products are warranted to the first direct purchaser its products against defective material and workmanship for a period of one (1) year from the date of purchase. The Company will either; repair, replace or refund the purchase price, at its option, if the product proves to be defective provided the purchaser notified The Company of the alleged defect within a reasonable time of its discovery and returns the products to The Company for evaluation, free of any liens and encumbrances. The purchaser shall return the alleged defective products and address notification of alleged defects to either of the addresses shown below.

This warranty is expressly in lieu of all other warranties expressed or implied, including the warranties of merchantability and fitness for use and all other obligations or liabilities on the part of The Company, and The Company neither assumes nor authorizes any other person to assume for it, and other liability in connection with the sale hereunder. The Company disclaims any liability for product defects that are due to product misuse, improper product selection or misapplication.

The Company shall not be liable for customer's costs, lost profits, good will or other special or consequential damages. The Company's liability in all events is limited and shall not exceed, the value of merchandise involved.

Certain products listed are protected by one or more of the following patents: U.S. PAT. 4,462,258; 4,454,760; 3,161,051 PAT. Canada 1964

KING-GAGE
A NOSHOK Company

Adaptive Industrial Solutions
sales@adaptiveind.com | (877) 818-5009

www.king-gage.com

Tank Level Indicators





KING-GAGE LP3

MULTIPLE TANK LEVEL DISPLAY SYSTEM

- Intuitive operator interface
- Graphic color LCD touch screen terminal
- Built-in web server and Ethernet communications

LP3 system is intended for production facilities with 8 to 32 tanks or process vessels requiring level measurement and inventory monitoring. Tanks are graphically displayed on the screen and include a simple bargraph icon to convey tank level status at a glance. This tank liquid level measurement display package includes signal conditioning, data acquisition and network communications link(s) that can simplify the integration of tank level into a process control environment.



KING-GAGE LP2 SP

MULTIPLE TANK INDICATOR / SET POINT CONTROLLER

- Monitors up to 8 tanks
- LCD display shows total volume (or weight)
- Set point status display panel

LP2 SP adds the functionality of digital set point control to deliver a complete level monitoring and simplified control solution for process management. Set points are easily entered as volume, weight, or percent full values for consistent and accurate process triggers such as pump control or other on/off functions. LP2 SP includes a display panel to visually confirm set point actuations for each tank. Personnel can easily monitor level set point status of any or all tanks in the system at a glance.



KING-GAGE LP2
DIGITAL TANK LEVEL INDICATOR

- Single or Multiple Tank versions (up to 8 tanks)
- Displays level as total volume (or weight) in tank
- Operator interface keypad

LP2 digital tank indicator displays tank level in units of volume, weight or percent full. Expressing tank level directly in engineering units—an alphanumeric LCD panel provides 10-character tank identification with 8-digit display of the tank level value. Keypad allows density correction and alternate units selection. Application data including tank capacity and sensor range is read from a pre-programmed iButton datapack. Digital serial output (RS-485) can be configured for ASCII or Modbus-RTU emulation.



iButton datapack



KING-GAGE LevelBAR
TANK LEVEL INDICATOR

- Electronic or pneumatic input
- Custom scale in volume or weight
- Graphic LED column display

LevelBAR indicator is designed for liquid level tank gauging.
This unique analog column indicator works as either a local or supplemental remote display in new or retrofit applications. The system will accept standard 4–20 mA transmitter output or can be ordered for pneumatic pressure measurement (for direct replacement of mercury tank gauges or other fluid-filled manometers).

KING-GAGE LP1
DIGITAL TANK LEVEL INDICATOR

KING-GAGE LP1 tank level display is available as single (1 tank) or dual channel (2 tanks) input. Bright LED dual line display comes programmed with your choice of volumetric or weight readout. LP1 options include dual level set points with SPDT relays for alarms or pump/valve control. Modbus digital output is also available.



LP1 tank level display with dual SPDT outputs

COMMUNICATIONS/PROCESS CONTROL INTEGRATION

KING-GAGE systems offer digital output for sharing tank level inventory data across the process floor or even to a corporate enterprise. This data is already density compensated and correlated to specific tank geometry so it can eliminate the need to input level transmitter signals directly to analog I/O cards at the PLC for process control integration. (Various products support Ethernet, Modbus, Allen-Bradley DF1, ASCII.)

Liquid Level Transmitters



APPLICATIONS

Pressure-based systems are among the most simple and reliable technologies for measuring level. King offers components designed to deliver complete process control and inventory management solutions. Liquid level transmitter selections include various configurations and materials for total compatibility. We provide accurate and reliable systems designed to function in harsh and demanding environments.



AcraSensor



ES2 Level Transmitter



ES3 Level Transmitter

SANITARY

These sensors are especially suited to a wide range of sanitary applications on storage or continuous processing vessels including heavy washdown environments. Choose these configurations for food processing, dairy, beverage, personal care, pharmaceutical, and other high purity processing applications. Selections include KING-GAGE AcraSensor,the KING-GAGE ES2 Transmitter and the KING-GAGE ES3 Transmitter.



TeleSensor



LevelWAV Radar



738 D/P LiquiSeal Purge Control

CHEMICAL/PETROCHEMICAL

We offer rugged reliable sensors and transmitters for high temperature and/or corrosive media. Pressure based measurement easily tolerates foam and/or turbulence in the process. Guided wave radar can provide reliable level where high process temperatures and/or pressures exist. Selections include KING-GAGE D/P LiquiSeal Purge Control and the KING-GAGE LevelWAV Transmitter.



ES2 Level Transmitter



TeleSensor



788 D/P Purge Control

INDUSTRIAL

These are suitable for general application tank liquid level measurement, including fuel/diesel, wastewater, or even difficult to gauge asphalts and slurries. Choose from air purge or diaphragm based liquid level pressure measurement and benefit from low cost of installation compared to other technologies. Selections include KING-GAGE TeleSensor and the KING-GAGE D/P Purge Control.



780 Purge Control



TeleSensor



LevelWAV Radar

EXPLOSION HAZARD ZONE

In addition to intrinsically safe (IS) transmitters, we offer the unique option of inherently safe pneumatic output level sensors for explosion hazard zone applications. As an alternative, pneumatic components can eliminate the need for electrical energy with the zone. Within Class 1/Division1 environments, choose the right cost-effective solution. Selections include the KING-GAGE LevelWAV transmitter and the KING-GAGE Purge Control.

MOUNTING SHELLS AND ADAPTERS

Mounting shells for flush welding to the inner tank liner (also applicable to sanitary flush mount) in two lengths for insulated wall tanks as well as a short shell for single wall tanks; wetted materials are 316L stainless steel. Adapter fittings are available for retrofit of Rosemount, Foxboro, Anderson Instrument, Continental/Wizard, Liquid Scale, Cherry-Burrell, Tank Mate.

- Flange Mount
- Flush Mount
- Sanitary Clamp Mount
- Retrofit



DOWNPIPE CHECK VALVE



The KING-GAGE Downpipe Backflow Check Valve is an engineered component to guard against liquid traveling up through the downpipe and into the system pressure line(s). A specially designed float pin rises up to seal the valve shut when liquid enters from the downpipe through the bottom of the unit. Use for downpipe purge systems employing KING-GAGE Purge Control or LiquiSeal Purge Control liquid level transmitters.

Liquid Level Transmitters



KING-GAGE LevelWAV
MODEL 3700 PULSE BURST LEVEL RADAR

LevelWAV uses pulsed microwave energy is emitted into free space and reflected by the liquid surface. Measured distance is based on the time of flight (ToF) principle to determine tank level. Advanced smart circuitry automatically adjusts transmit energy and receiver gain to distinguish only liquid level from reflected signals due to tank internal structure.

- Not affected by surface vapor, foam or agitation
- Easily measure corrosive materials or slurries
- Accurately measure level, volume or ullage

Available in sanitary configurations for food & dairy applications (stainless steel construction and food-grade PTFE antenna).



MODEL 3700 LEVELWAV



5600 D/P TRANSMITTER



5900 D/P MODULE

KING-GAGE D/P TRANSMITTER
PNEUMATIC-TO-CURRENT OUTPUT

D/P transmitters convert differential pressure (D/P) inputs into proportional 4 mA to 20 mA output. The precision pneumatic-to-current transducer is especially suited to hydrostatic tank level and other critical pressure measurements.

These transmitters are available in hardened package or a compact surface mount model for enclosure placement (or protected area). Can be used to retrofit existing air-operated (pneumatic) systems.

- Use to integrate pneumatic systems with PLCs
- Better than ±0.02% span repeatability
- Front panel zero/span adjust and meter points

Bubbler Gauges

These bubbler gauges are well-type manometers which act as frictionless hydrostatic force-balances. A liquid fill is raised in direct proportion to the magnitude of an applied pressure corresponding to liquid depth. These indicators are in use worldwide and have proven their dependability over decades of service.

KING-GAGE BUBBLER GAUGE
MODEL 7750 FLUID FILLED INDICATOR

- Inherently accurate operating principle
- Use with pneumatic output transmitter
- Custom scale in volume or weight



MODEL 7750

KING-GAGE BUBBLER GAUGE HAND PUMP
MODEL 5992 FLUID FILLED INDICATOR

- All pneumatic operation
- Custom scale in volume or weight
- Integral hand pump to operate system



MODEL 5992

KING-GAGE ROTAMETER BUBBLER GAUGE
MODEL 5990/5993 COMPRESSED AIR OPERATION

- Rotameter air flow regulator
- Custom scale in volume or weight
- All pneumatic operation using compressed air



MODEL 5990

LevelBAR HP



KING-GAGE LevelBAR HP
TANK LEVEL INDICATOR WITH HAND PUMP

Based on our LevelBAR indicator, this complete solution package incorporates a hand pump to pressurize the tank level system using a downpipe extending down into the tank. (Requires an external source of 100–240 Vac 50 / 60 Hz electrical power for operation.)

SET POINT RELAYS



KING-GAGE MULTI-POINT
SET POINT PROCESS SWITCH

The Process Switch can be used to control continuous process operations, provide fail-safe limiting, or alarm functions. It provides continuous monitoring of a typical process loop with four (4) independent setpoints.

- 4 adjustable set points
- Simple control process functions
- Independent SPDT (form C) relays

Compressed Air Filters



INSTRUMENT GRADE COMPRESSED AIR

A prerequisite for pneumatic instrumentation (including certain components in this catalog) is clean, dry, and oil free compressed air. Instrument grade air can be provided through the use of submicron, coalescing type compressed air filters installed upstream in the line supplying the pneumatic components.

Ultra clean instrument grade compressed air is also critical for the performance and reliability of pumps and valves, packaging equipment, actuators, paint and spray coating equipment, and fluidic devices. High efficiency KING Filters use coalescing action to remove liquid aerosols (oil and water). Dual stage design ensures long service life and delivers clean air even when cartridge elements reach the end of service life.

- Ensures reliability of pneumatic components
- Completely removes oil, water, and solids
- Dual cartridges for longer service life



Ultra-C Air Control Station



Visi-Guard Dryer



T51 Stainless Steel Filter-Regulator



Air-Guard Two-Stage Coalescing Filter

Application Support

APPLICATION ASSISTANCE AND SPECIFICATIONS

When specifying a system, it is important to consider the type of process and nature of the liquid product (i.e., corrosive, viscous, food grade, etc.). Many of the components outlined in this catalog are particularly suited to certain applications. More detail product specifications and application assistance are available from KING-GAGE or your local King Distributor.

Our **Factory Customer Service Department** provides support for both KING-GAGE liquid level tank gauging systems and KING Filters for compressed air filtration. Factory Support is available 8:00 AM - 5:00 PM Eastern Time, Telephone 1 855-367-2494.

CHEMICAL PROCESSING



We offer reliability and resilience in level measurement for challenging applications such as molten sulfur. Our hybrid bubbler systems require only a rigid pipe extending into the sulfur pit with the actual transmitter element externally mounted.

WASTEWATER TREATMENT



Water/wastewater treatment facilities have a range of liquid level applications including settling ponds, sludge, slurries and chemical storage tanks. Our transmitter solutions include radar or highly engineered bubbler level sensing for robust and reliable process monitoring.

PULP/PAPER MILLS



Level measurement using hydrostatic pressure transmitters have proven performance in pulp storage or mixing chests. Pulp production with high temperatures involving fibrous slurry mixtures can employ the simple and rugged downpipe purge technique for reliably accurate measurement.

FOOD/DAIRY/BEVERAGE



Compact sanitary configuration flush mount level transmitters allow for continuous process operations with clean-in-place practices. Our 3-A authorized transmitters are widely used in beverage bottling, ice cream, fluid milk and yogurt production.

INDUSTRIES SERVED

Energy/Petrochemical

Akzo Nobel Coatings Inc. • B.F. Goodrich • Calgon Corporation • BASF Corporation • Castrol/BP Lubricants CVC • E.I. Dupont de Nemours • Eastman Chemical • Corning Inc. • Exxon Mobil Corporation • Glidden Corporation • Hoechst Celanese • Nalco Chemical • PPG Industries • Quaker Chemical • Resimon, C.A. • Flint Group • Ashland Chemical

Food/Beverage

Dean Foods • PepsiCo • Ralston Purina • Tyson Foods • Frito Lay Inc. • Miller Brewing Company • ConAgra Foods • Dannon Company • Campbell Soup Company • Coca Cola/ Minute Maid • Grupo Lala • Grupo Modelo S.A. de C.V. • Davisco Foods International • General Mills • Kraft Foods • Del Monte Foods • Liconsa S.A. de C.V. • M&M/Mars • The Quaker Oats Company • Kellogg Company • Nestlé USA • Ocean Spray • Ventura Foods • REXAM

Consumer Products

Black & Decker • Dial Corporation • Wyeth Pharmaceuticals • Mattel Inc. • Kimberly-Clark Corporation • General Motors Corporation • Chrysler Corporation • International Paper • Westinghouse Electric • Unilever NV • Kiwi Brands • Motorola • Owens Corning • Whirlpool Corporation

General Industry

Fred Olsen Energy ASA • SBM Atlantia • Siapem SpA. (Eni Group) • Transocean Global Santa Fe • Andrie Marine Transportation • Atwood Oceanics • Noble Drilling • ENSCO Offshore International • AMOCO Transport • US Navy

Industries Served

Founded in 1937, KING-GAGE, A NOSHOK Company supplies the food, dairy, beverage, personal care, pharmaceutical, industrial, and chemical sectors as well as specialized applications for the marine industry. Recognized as a leader in the design and manufacture of level measurement instrumentation, KING-GAGE continues its commitment to engineering, innovation, and product development.



KING-GAGE
A NOSHOK Company

Adaptive Industrial Solutions
sales@adaptiveind.com
(877) 818-5009

Web: www.king-gage.com