STAINLESS STEEL LIQUID FILLED GAUGES



Model BR251L

MODEL BR250L

FEATURES:

The Model BR250L from Blue Ribbon Corporation is a high quality line of liquid filled gauges. Its crimped, welded stainless steel bezel and glycerine fill is designed for gas or liquid applications that require damping.

SPECIFICATIONS:

- Case: 316 stainless steel
- Stainless steel welded connection
- Stainless steel crimped bezel
- Glycerine Fill Standard (Dry Available)
- Polycarbonate Lens
- Accuracy:
  1½" and 2" dial Sizes: 2%
  2½" Dial: 1.6% (ASME B40.1, Grade A)
  4" and 6" Dial Sizes: 1% (ASME B40.1, Grade 1A)
- Dual Scale: PSI & BAR (x100=kPa)
- Single Scale (PSI) Available
- Ambient Temperature:
  Filled: 0 °F to +150 °F
  Dry: -30 °F to + 150 °F
- Welded Socket
- Enclosure: IP65

FIELD OPTIONS:

- Dial Sizes:
  1½", 2", 2½", 4", 6"
- Connection Sizes:
  ⅛" (M) NPT on 1½" and 2"
  ¼" (M) NPT on 2", 2½", and 4"
  ½" (M) NPT on 4" and 6"
- Front Flange (FF) or Back Flange (BF) Mount
- U-Clamp Mount (UC)

RANGE	CODE	MAJOR INC.	MINOR INC.
30/0" VAC	A	5	0.5
30/0/15	CB	5	0.5
30/0/30	CC	10	1
30/0/60	CD	10	1
30/0/100	CE	20	2
30/0/150	CF	20	2
30/0/300	CH	50	10
0/15	B	2	0.2
0/30	C	5	0.5
0/60	D	10	1
0/100	E	20	2
0/160	F	20	2
0/200	G	40	4
0/300	H	50	5
0/400	I	50	5
0/500	4	100	10
0/600	K	100	10
0/800	L	100	10
0/1000	M	200	20
0/1500	N	200	20
0/2000	O	400	50
0/3000	P	500	50
0/4000	Q	500	50
0/5000	R	1000	100
0/6000	S	2000	200
0/10,000	U	2000	200
0/15,000	V	2000	200

© 2015 Blue Ribbon Corp. **Adaptive Industrial Solutions**

sales@adaptiveind.com | (877) 818-5009

DIMENSIONAL DRAWING

All dimensions are in inches (mm)

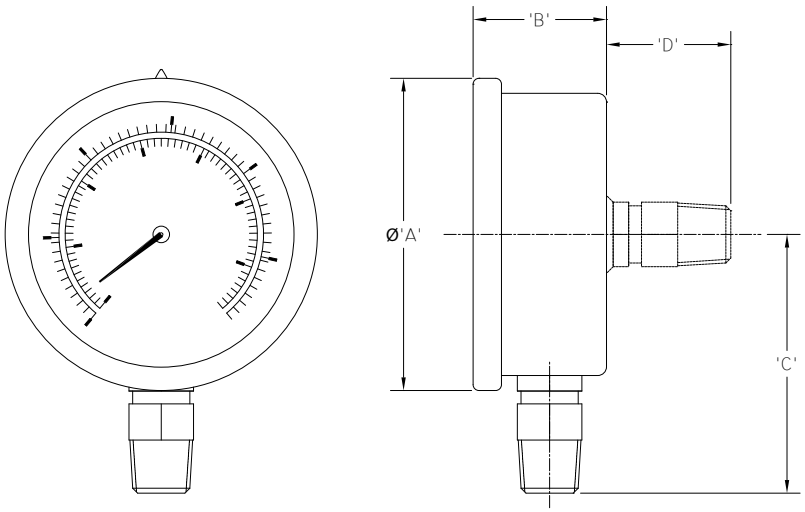

BR250L
SS LIQUID FILLED GAUGE

DIAL SIZE	'A'	'B'	'C'	'D'
Ø1.50	1.85	1.08	1.58	0.74
Ø2.00 (1/8)	2.25	1.155	2.15	0.91
Ø2.00 (1/4)	2.25	1.155	2.165	0.935
Ø2.50	2.675	1.16	2.185	1.22
Ø4.00 (1/4)	4.29	1.4	3.2	1.256
Ø4.00 (1/2)	4.29	1.4	3.24	1.293

ORDERING GUIDE

Example: BR251L158C

BR251	L	15	8	C
Model Number		**Dial Size**	**Connector Size**	**Pressure Range**
251 - bottom connect		1.5" - 15	8 -⅛" NPT	See chart on page 1
252 - back connect		2.0" - 20	4 - ¼" NPT	
Fill Type		2.5" - 25	2 - ½" NPT	
D - dry, non-filled		4" - 40		
L - Liquid, glycerine filled		6" - 60		

*Available in Front Flange (FF), Back Flange (BF), and U-Clamp (UC) Mount

All specifications are for reference purposes only. In the interests of continuous product improvement, all specifications are subject to change without notice. Please contact Blue Ribbon Corporation for assistance with your application.

© 2015 Blue Ribbon Corp. **Adaptive Industrial Solutions**
sales@adaptiveind.com | (877) 818-5009