FORGED BRASS CASE GAUGE



Model BR901

MODEL BR901

FEATURES:

- Dial Sizes: 2½", 4"
- For use in mining and automotive hydraulic systems and heavy vibration areas
- Suitable for non-sparking areas
- Available in ¼" process connection
- Immediate shipment upon request in 2.5" dial size

SPECIFICATIONS:

- Forged Brass Case
- Brass Socket and Movement
- Dial Sizes: 2½", 4"
- Phosphor Bronze Bourdon Tube
- Glycerin Filled
- Connection Sizes:
  ¼" (M) NPT on 2" thru 4"
- Accuracy: 1.5%
- Ambient Temperature: -40 °F to +150 °F
- Easy to Read Single Scale
- IP65 Enclosure
- Meets ASME Standard B40.100

RANGE	RANGE CODES	FIGURES	MINOR, INC.
30/0" VAC	A	5" hg	0.5" hg
30/0/15	CB	10" hg / 5 PSI	0.5" hg / 0.5 PSI
30/0/30	CC	10" hg / 10 PSI	1" hg / 0.5 PSI
30/0/60	CD	10" hg / 10 PSI	2" hg / 1 PSI
30/0/100	CE	30" hg / 20 PSI	5" hg / 2 PSI
30/0/150	CF	30" hg / 20 PSI	5" hg / 2 PSI
30/0/300	CH	30" hg / 50 PSI	10" & 5 PSI
0/15	B	2 PSI	0.2 PSI
0/30	C	5 PSI	0.5 PSI
0/60	D	10 PSI	1 PSI
0/100	E	20 PSI	2 PSI
0/160	F	20 PSI	2 PSI
0/200	G	40 PSI	5 PSI
0/300	H	50 PSI	5 PSI
0/400	I	50 PSI	5 PSI
0/600	K	100 PSI	10 PSI
0/1000	M	200 PSI	20 PSI
0/1500	N	200 PSI	20 PSI
0/2000	O	400 PSI	50 PSI
0/3000	P	500 PSI	50 PSI
0/5000	R	1000 PSI	100 PSI
0/6000	S	1000 PSI	100 PSI
0/10,000	U	2000 PSI	200 PSI

© 2019 Blue Ribbon Corp.

Adaptive Industrial Solutions
sales@adaptiveind.com | (877) 818-5009

FORGED BRASS CASE GAUGE

DIMENSIONAL DRAWING

All dimensions are in inches (mm)

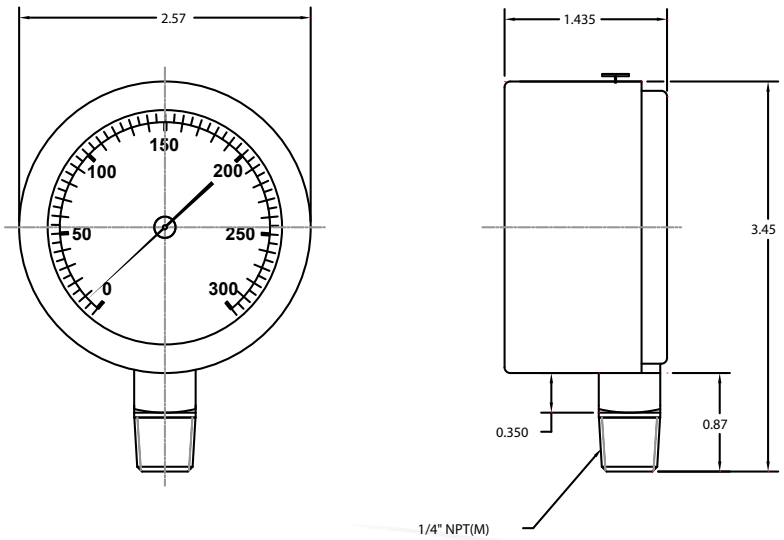

BR901D-254H
63MMX1/4"NPT Bottom
0-300 PSI

ORDERING GUIDE

Example: BR901L254H

BR901	L	25	4	H
Model Number		**Dial Size**	**Connector Size**	**Pressure Range**
Fill Type		2.5" - 25	4 - ¼" NPT	
L - Glycerin filled		4.0" - 40		See chart on page 1

All specifications are for reference purposes only. In the interests of continuous product improvement, all specifications are subject to change without notice. Please contact Blue Ribbon Corporation for assistance with your application.

© 2019 Blue Ribbon Corp.

Adaptive Industrial Solutions
sales@adaptiveind.com | (877) 818-5009