Model ULAT Tube-N-Tube Lantern Flow Indicators (patented)

FEP Teflon® Lined (patented)

- Approved by the Factory Mutual System (150° F max)
- Available in any length up to 72 inches (Max length for FM approved models per specifications below)
- Stock lengths are 8 and 12 inches
- Full 360° unobstructed visibility
- Patented one-piece SuperSeal inserts are self-sealing
- Wetted part is one-piece FEP Teflon®, flared over SuperSeal insert
- Available with sanitary fittings
- Reducing flanges and threaded end connections are available
- Designed for cryogenic and hot process applications
- Excellent for corrosive, viscous, or sanitary service
- Design is triple sealed and insulated
- Sight tube sleeve can be calibrated directly
- Custom designs available; consult factory
- Optional 304 or 316 SS construction
- ANSI Class 300 lb flanges available



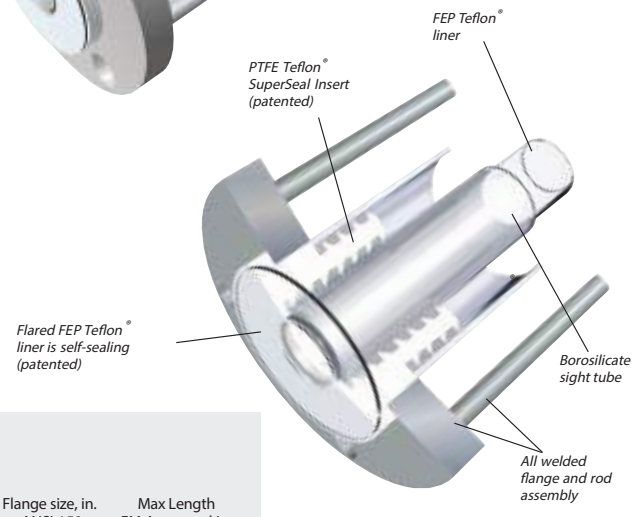

Standard Construction

- FEP Teflon® inner sight tube, one piece
- PTFE Teflon® SuperSeal inserts
- Borosilicate sight tube sleeve
- Polycarbonate or borosilicate outer sight tube
- Carbon steel shield and flanges, epoxy coated
- ANSI Class 150 lb flanges

Model ULAT Specifications

Indicator size, inches	Sight tube material	Outer tube size, in.	Outer tube material	Sleeve tube size, in.	Sleeve tubing	Indicator rating, psig	Flange size, in. ANSI 150	Max Length FM Approved in.
1.00	FP	2.25	LX	1.00	PI	150	1.50	48
1.00	FP	2.75	LX	1.00	PI	150	2.00	48
1.00	FP	2.75	OG	1.00	PI	150	2.00	48
1.25	FP	2.75	LX	1.50	HW	285 (1)	2.00	60
1.25	FP	2.75	OG	1.50	HW	285 (1)	2.00	60
1.50	FP	2.75	LX	1.50	PI	135	2.00	48
1.50	FP	2.75	OG	1.50	PI	135	2.00	48
1.65	FP	4.00	LX	2.00	HW	285 (1)	3.00	60
1.65	FP	4.00	OG	2.00	HW	285 (1)	3.00	60
2.00	FP	4.00	LX	2.00	PI	115	3.00	48
2.00	FP	4.00	OG	2.00	PI	115	3.00	48
2.75	FP	5.00	AC	3.00	HW	200	4.00	48
2.75	FP	5.00	OG	3.00	HW	200	4.00	48
3.00	FP	5.00	AC	3.00	PI	95	4.00	48
3.00	FP	5.00	OG	3.00	PI	95	4.00	48
4.00	FP	7.00	AC	4.00	HW	100	6.00	12
4.00	FP	7.00	OG	4.00	HW	100	6.00	12
4.00	FP	7.00	AC	4.00	PI	85	6.00	48
4.00	FP	7.00	OG	4.00	PI	85	6.00	48
6.00	FP	9.00	AC	6.00	PI	60	8.00	48
6.00	FP	9.00	OG	6.00	PI	60	8.00	48
8.00	FP	10.00	AC	8.00	PI	40	10.00	48
8.00	FP	10.00	OG	8.00	PI	40	10.00	48

FP = FEP Teflon® PI = Standard Borosilicate HW = Heavywall Borosilicate LX = Outer Polycarbonate
OG = Outer Borosilicate AC = Outer Acrylic Note: (1) Actual flange pressure rating may be less based on material selected.

Model ULAT Tube-N-Tube Armored Flow Indicator - Teflon® Lined

Specifications for Ordering

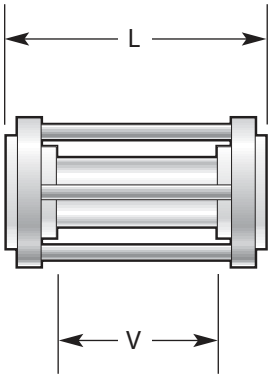

Note: Visual length (V) is 4 inches less than overall length (L).

Indicator Part Number

Use the spaces below to generate the model number for your indicators. Codes for materials and diameters are from the chart below.

Overall length (L), inches	Indicator model	Inner sight tube material	Inner sight tube size	Flange/rod material	Flange size	Outer sight tube material	Outer sight tube size	Sleeve tube material	Sleeve tube size
	UL AT	FP							

☒ PTFE Teflon® lined reducing flanges: size_____ x _____ ☒ Illuminator

Example Part Number: 54-U L AT-PF 40-CS60- OG 60-H W 40

54	54 inches overall length
ULAT	Tube-N-Tube Lantern Flow Indicator, Teflon® lined
FP	FEP Teflon® inner sight tube
40	4.0-inch inner sight tube size
CS	Carbon steel rods and flanges
60	6.0-inch, 150-lb flanges
OG	Outer borosilicate sight tube
60	6.0-inch outer sight tube size
HW	Heavywall borosilicate inner sight tube sleeve
40	4.0-inch inner sight tube sleeve size

Codes for Part Numbers

Sight Tube Material	Code
FEP Teflon®	PF
Outer Tube Material	
Acrylic	AC
Borosilicate	OG
Polycarbonate	LX
Sleeve Tube Material	
Borosilicate Pipe	PI
Heavywall Borosilicate	HW
Flange/Rod Material	
Carbon Steel	CS
316 SS	S6
304 SS	S4

Size, in.	Code
1.00	10
1.25	12
1.50	15
1.63	16
2.00	20
2.25	22
2.75	27
3.00	30
4.00	40
6.00	60
7.00	70
8.00	80
9.00	90
10.00	100

Teflon is a registered trademark of E. I. Dupont

Adaptive Industrial Solutions
sales@adaptiveind.com | (877) 818-5009