PROCESS PRESSURE GAUGE



Model BR411/412



Now available with high-visibility luminescent dial

MODEL BR400/BR800

FEATURES:

Model BR400/BR800 Series from Blue Ribbon Corporation are a family of highly rugged stainless steel and brass process pressure gauges. They are designed to provide reliable process pressure measurements within safety critical environments such as oil and gas, chemical processing, power stations, environmental engineering and plant construction environments.

SPECIFICATIONS:

- Dial Size: 4½"
- Connection Sizes: ¼" or ½" NPT Male
- Bottom mount or back mount
- AISI 316 Stainless Steel Bourdon tube & socket (BR400)
- Brass tube and socket (BR800)
- Accuracy: 0.5% FS (ASME B40.1, Grade 2A)
- Phenolic-Solid Front/Blow-Out Back Case
- Lens: Shatterproof Safety Glass
- Movement: 304 Stainless Steel with Over/Under Stops
- Knife Edge Micro-Adjustable Pointer
- IP65 Enclosure
- Working Pressure: 75% FSO
- Over Pressure: 20% Up to 10K PSI; 10% over 10K PSI
- Ambient/Process Temperature
  Filled: -40 °F to +160 °F
  Dry: -40 °F to +180 °F

OPTIONS: (Consult Factory)

- Liquid Fillable/No Kit Required
- Monel tube & socket available
- Connection Sizes: ¼" or ½" NPT Male
- Vibration Free Movement
- Luminescent Dial

RANGE	RANGE CODES	FIGURES	MINOR, INC.
30/0 Hg Vac	A	5"	0.2"
30/0/15	CB	10" & 5 PSI	1" & 0.5 PSI
30/0/30	CC	10" & 5 PSI	1" & 0.5 PSI
30/0/60	CD	10" & 10 PSI	2" & 1 PSI
30/0/100	CE	10" & 20 PSI	2" & 1 PSI
30/0/150	CF	10" & 30 PSI	5" & 2 PSI
30/0/200	CG	10" & 50 PSI	5" & 2 PSI
30/0/300	CH	10" & 50 PSI	10" & 5 PSI
0/15 PSI	B	3 PSI	0.2 PSI
0/30 PSI	C	5 PSI	0.2 PSI
0/60 PSI	D	5 PSI	0.5 PSI
0/100 PSI	E	10 PSI	1 PSI
0/160 PSI	F	20 PSI	1 PSI
0/200 PSI	G	20 PSI	2 PSI
0/300 PSI	H	50 PSI	2 PSI
0/400 PSI	I	50 PSI	2 PSI
0/600 PSI	K	50 PSI	5 PSI
0/800 PSI	L	100 PSI	5 PSI
0/1000 PSI	M	100 PSI	10 PSI
0/1500 PSI	N	250 PSI	10 PSI
0/2000 PSI	O	200 PSI	20 PSI
0/3000 PSI	P	500 PSI	20 PSI
0/5,000 PSI	R	1,000 PSI	50 PSI
0/10,000 PSI	U	1,000 PSI	100 PSI
0/15,000 PSI	V	2,500 PSI	100 PSI
0/20,000 PSI	V2	2,000 PSI	200 PSI

© 2015 Blue Ribbon Corp. **Adaptive Industrial Solutions**

sales@adaptiveind.com | (877) 818-5009

DIMENSIONAL DRAWING

All dimensions are in inches (mm)

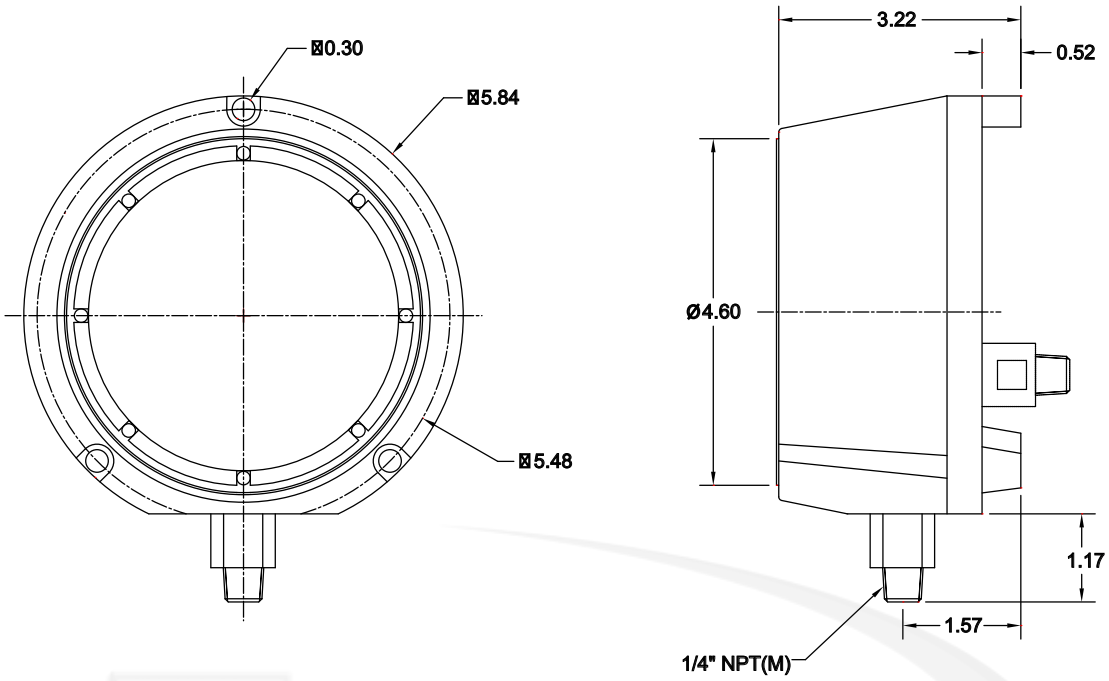

ORDERING GUIDE

Example: BR411D454M

BR4	11	D	45	4	M
Model #	Mount Type	Fill Type	Dial Size	Connector Size	Pressure Range
BR4 - SS Internals	11 - bottom mt	D - dry, non-filled	4.5"	2 - ½" NPT	See chart on page 1
BR8 - Brass Internals	12 - back mt	L - Glycerine filled		4 - ¼" NPT	

Option: VFM - Vibration Free Movement

All specifications are for reference purposes only. In the interests of continuous product improvement, all specifications are subject to change without notice. Please contact Blue Ribbon Corporation for assistance with your application.

© 2015 Blue Ribbon Corp. **Adaptive Industrial Solutions**
sales@adaptiveind.com | (877) 818-5009