Diaphragm Seal Solutions

NOSHOK









Replaceable
- Bolted
- Flow-Through Annular Style

Non-Replaceable
- Non-Metallic
- Sanitary
- Front Flush
- Bolted

Accessories



At NOSHOK, we pride ourselves on being innovators in the industry by continually offering the latest technology and measurement solutions, and providing the best customer support in the marketplace.

Established in 1967, NOSHOK was one of the first companies to offer liquid filled pressure gauges. We also took a bold step by backing our quality gauges with an extended 3-year warranty. That unwavering standard of quality has endured for 50+ years, and as we have expanded our product offering we continue to provide industry-leading warranties. NOSHOK also leads the industry as one of the first companies to offer corrosion-resistant zinc nickel plating standard on our carbon steel valves.

We have the capacity to put together special requirements which are so often hard to find. If you do not find what you need in this catalog, chances are we can still put a solution together.

NOSHOK is committed to providing excellence on every level. Thank you for choosing NOSHOK products.

Christian F. L. Cole
CEO/President

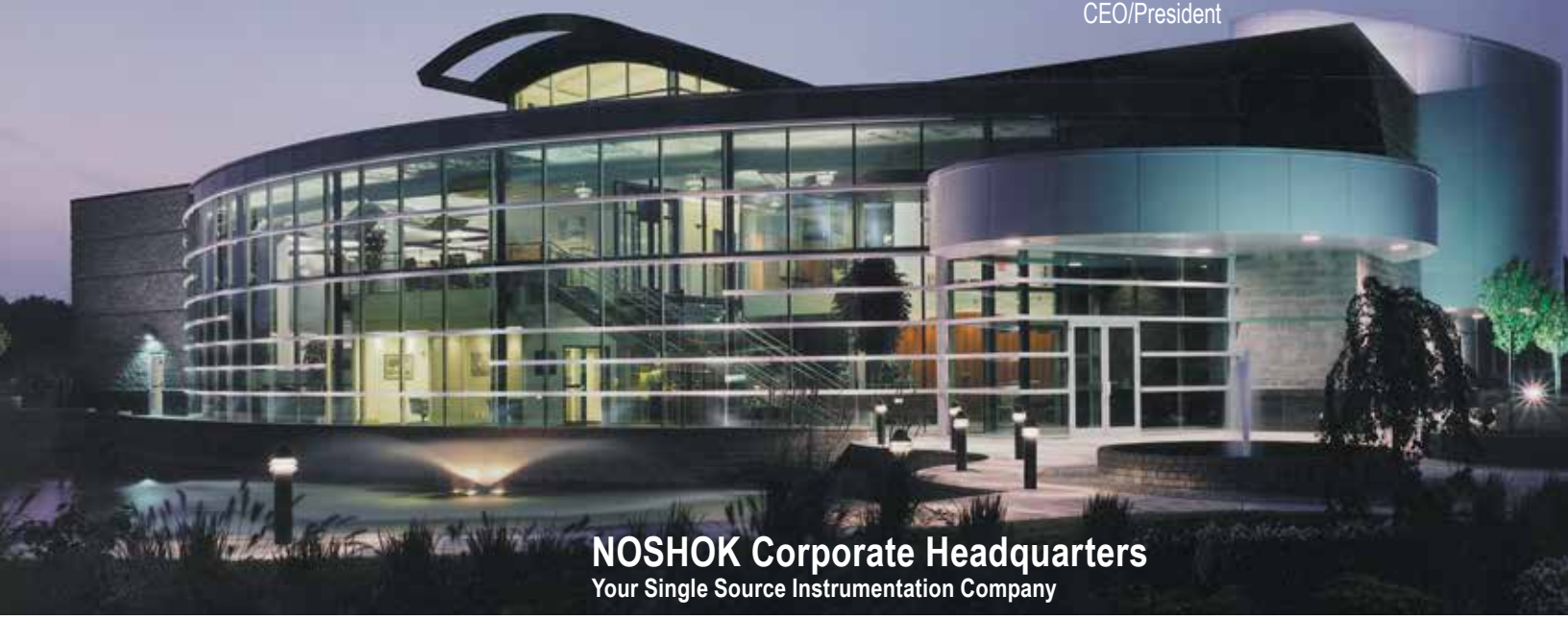

NOSHOK Corporate Headquarters
Your Single Source Instrumentation Company

NOSHOK is a member and actively supports:

ASME SETTING THE STANDARD
fisa Distributors Serving Sanitary Processing
FPDA motion control solutions network
ASSOCIATION FOR HIGH TECHNOLOGY DISTRIBUTION AHTD
American Water Works Association
NATIONAL FLUID POWER ASSOCIATION NFPA

NOSHOK is an ISO 9001:2015 registered company.

WARRANTY INFORMATION

NOSHOK's **One Year Warranty** applies to all NOSHOK diaphragm seals, and all options & accessories listed in this catalog.

NOSHOK guarantees all products to be free from defects in material and workmanship and to operate within the catalogued performance specifications. These products must be operated within the catalogued environmental and application parameters. Determination of failure will be made by NOSHOK, Inc.'s equipment and personnel or a certified test facility specializing in this type of evaluation. Diaphragm seal failures determined to be caused by over-range, incompatibility with environment or product media and abuse will not be considered under this warranty. NOSHOK, Inc. will, at its discretion, repair or replace the working parts of the damaged diaphragm seal without cost to the customer.

T A B L E O F C O N T E N T S

NOSHOK

REPLACEABLE DIAPHRAGM

Standard & Elevated Pressure, Bolted:

TYPE 10/10H 4-5

Reduced Pressure, Non-Metallic Lower, Bolted:

TYPE 10L 6-7

Flow-Through Annular Style:

TYPE 40 8-9

NON-REPLACEABLE DIAPHRAGM

All Non-Metallic:

TYPE 5 10-11

Sanitary, Clamped-Style, ASME-BPE:

TYPE 12 12-13

Front Flush:

TYPE 20 14-15

Standard & Elevated Pressure:

TYPE 25/25H 16-17

High Volumetric Displacement:

TYPE 29 18-19

Standard & Elevated Pressure, Bolted:

TYPE 30/30H 20-21

Reduced Pressure, Non-Metallic Lower, Bolted:

TYPE 30L 22-23

ACCESSORIES

Plain and Armored Capillaries, Cooling Element, Sanitary Clamps and Gaskets 24

Reference Information 25-26

In keeping with and for purpose of product and/or manufacturing process improvements, NOSHOK, Inc. reserves the right to make design changes without prior notice.

Adaptive Industrial Solutions | sales@adaptiveind.com | (877) 818-5009

Standard & Elevated Pressure, Bolted

TYPE 10/10H



- Designed to isolate the pressure measuring instrument from high temperatures, or corrosive or viscous process media
- Can be used for remote mounting of pressure instrument(s) with capillary
- Utilizes a replaceable diaphragm clamped between the flanged metal housings with an o-ring seal to create a leak-free union
- Process connection sizes from 1/4″ NPT through 1-1/2″ NPT
- Flushing port connection is an available option that allows the wetted areas of the seal to be cleaned, or the process vented without removing the unit from the line
- Consider instrument size, pressure range, media composition, ambient and operating temperature, and maximum working pressure when selecting
- Capillaries and cooling elements are available for elevated process temperatures, see page 24
- Fill fluid must be compatible with process media; i.e. Glycerin may become volatile in conjunction with a strong oxidizing agent such as chlorine, forms of oxygen or peroxide and nitric acids

APPLICATIONS

- Water and wastewater
- Oil and gas
- Petrochemical
- Chemical processing
- Industrial automation
- Marine
- Agriculture
- Steel fabrication
- Mud pumping
- Pulp and paper
- Pneumatic

SPECIFICATIONS

Seal type	Threaded with replaceable diaphragm. Flanged available on request.			
Instruments	**Type**	**Size**	**Minimum Pressure**	**Maximum Pressure**
	Gauges	2-1/2″ to 6″	0 psig to 30 psig	0 psig to 2,000 psig (10H - 5,000 psig)
	Transducers	-	0 psig to 30 psig	0 psig to 2,000 psig (10H - 5,000 psig)
	Switches	-	0 psig to 30 psig	0 psig to 2,000 psig (10H - 5,000 psig)
Upper housing	Type	Non-continuous duty (10H continuous duty)		
	Connections	1/4″ NPT, 1/2″ NPT		
	Materials	Polyurethane enamel coated Steel, 316 Stainless Steel		
Diaphragm	Size	3.0″ (Type 10), 2-1/2″ (Type10 H)		
	Displacement	3.2 ml (Type 10), 1.4 ml (Type 10H)		
	Materials	316 Stainless Steel (Exotic materials available on request)		
O-rings		NBR, PTFE and FKM		
Lower housing	Connections	1/4″ NPT, 1/2″ NPT, 3/4″ NPT, 1″ NPT, 1-1/4″ NPT, 1-1/2″ NPT		
	Materials	Polyurethane enamel coated Steel and 316 Stainless Steel (Exotic materials available on request)		
	Flushing port	Optional 1/8″ NPT, 1/4″ NPT and dual ports		
Bolting		Zinc-plated Steel, optional Stainless Steel		
Operating temperature		Operating temperature is determined by the temperature/pressure configuration. See the Material temperature table.		

⚠ **WARNING:** This product can expose you to chemicals including Lead and Nickel, which are known to the State of California to cause cancer and birth defects or other reproductive harm. For more information go to www.P65Warnings.ca.gov

ORDERING INFORMATION									
TYPES	**10**	(2,000 psi)	**10H**	(5,000 psi)					
INSTRUMENT CONNECTION SIZES	**02**	1/4″ NPT	**04**	1/2″ NPT					
UPPER HOUSING MATERIALS	**C**	Carbon Steel	**S**	316 Stainless Steel					
DIAPHRAGM MATERIALS	**A**	Tantalum	**M**	Monel 400	**S**	316 Stainless Steel **	**U**	Titanium Grade 4	
	H	Hastelloy C – 276	**N**	Inconel 600	**T**	PTFE *, †	**V**	FKM *, ***	
O-RING MATERIALS	**B**	NBR	**T**	PTFE[1]	**V**	FKM			
PROCESS CONNECTION SIZES	**02**	1/4″ NPT	**06**	3/4″ NPT	**10**	1-1/4″ NPT			
	04	1/2″ NPT	**08**	1″ NPT	**12**	1-1/2″ NPT			
LOWER HOUSING MATERIALS	**C**	Carbon Steel	**M**	Monel 400	**S**	316 Stainless Steel			
	H	Hastelloy C-276	**N**	Inconel 600	**U**	Titanium			
OPTIONAL FLUSHING CONNECTIONS	**1F**	1/8″ NPT	**2F**	1/4″ NPT					
OPTIONAL FLUSH PORT PLUG	**P**	(Flush port plug will match lower housing material.)							

Please consult your local NOSHOK Distributor or NOSHOK, Inc. for availability and delivery information.

* Not available with 10H
** NBR o-rings standard with 316SS diaphragm
*** FKM o-rings standard with FKM diaphragm
† PTFE o-rings standard with all other diaphragms

EXAMPLE

Type 10
Instrument connection size ..... 1/4″ NPT
Upper housing material ..... 316 Stainless Steel
Diaphragm material ..... 316 Stainless Steel
O-ring material ..... NBR
Process connection size ..... 1/2″ NPT
Lower housing material ..... 316 Stainless Steel
Flushing connection (optional) ..... 1/8″ NPT

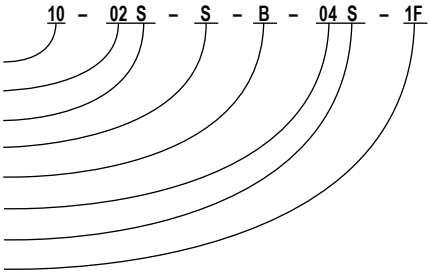

Type 10 Standard Pressure

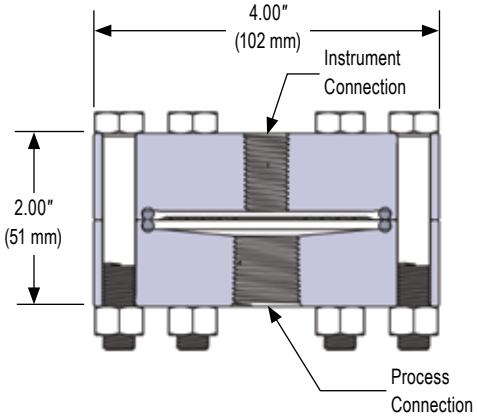

Type 10H Elevated Pressure

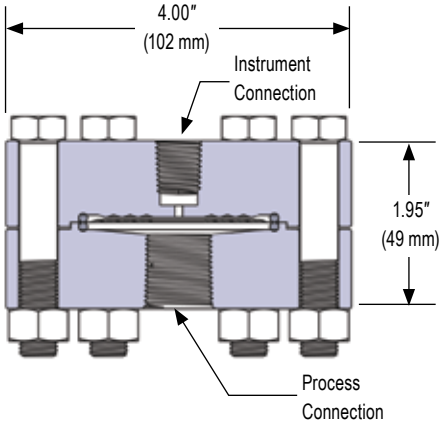

Reduced Pressure, Non-Metallic Lower, Bolted

TYPE 10L



- Intended for corrosive or viscous pressure media
- Designed for applications where typical metallic lower housings cannot withstand process media
- Can be used for remote mounting of pressure instrument(s) with capillary
- Utilizes a replaceable diaphragm clamped between the flanged housings with an o-ring seal to create a leak-free union
- Process connection sizes from 1/4″ NPT through 1-1/2″ NPT
- Consider instrument size, pressure range, media composition, ambient and operating temperature, and maximum working pressure when selecting
- Fill fluid must be compatible with process media; i.e. Glycerin may become volatile in conjunction with a strong oxidizing agent such as chlorine, forms of oxygen or peroxide and nitric acids

APPLICATIONS

- Water and wastewater
- Oil and gas
- Petrochemical
- Chemical processing
- Industrial automation
- Marine
- Agriculture
- Steel fabrication
- Mud pumping
- Pulp and paper
- Pneumatic

SPECIFICATIONS

Seal type	Threaded with replaceable diaphragm. Flanged available on request.			
Instruments	**Type**	**Size**	**Minimum Pressure**	**Maximum Pressure**
	Gauges	2-1/2″ to 6″	0 psig to 30 psig	0 psig to 200 psig
	Transducers	-	0 psig to 30 psig	0 psig to 200 psig
	Switches	-	0 psig to 30 psig	0 psig to 200 psig
Upper housing	Type	Non-continuous duty		
	Connections	1/4″ NPT, 1/2″ NPT		
	Materials	Polyurethane enamel coated Steel, 316 Stainless Steel		
Diaphragm	Size	3.0″		
	Displacement	3.2 ml		
	Materials	316 Stainless Steel, FKM, PTFE (Exotic materials available on request)		
O-rings		NBR, PTFE and FKM		
Lower housing	Connections	1/4″ NPT, 1/2″ NPT, 3/4″ NPT, 1″ NPT, 1-1/4″ NPT, 1-1/2″ NPT		
	Materials	PVDF, PP, PVC, PTFE (Other materials available on request)		
Bolting		Zinc-plated Steel, optional stainless Steel		
Operating temperature		Operating temperature is determined by the temperature/pressure configuration. See Material Temperature table.		

⚠ **WARNING:** This product can expose you to chemicals including Lead and Nickel, which are known to the State of California to cause cancer and birth defects or other reproductive harm. For more information go to www.P65Warnings.ca.gov

ORDERING INFORMATION								
TYPE	**10L**							
INSTRUMENT CONNECTION SIZES	**02**	1/4″ NPT	**04**	1/2″ NPT				
UPPER HOUSING MATERIALS	**C**	Carbon Steel	**S**	316 Stainless Steel				
DIAPHRAGM MATERIALS	**A**	Tantalum	**M**	Monel 400	**S**	316 Stainless Steel*	**U**	Titanium Grade 4
	H	Hastelloy C – 276	**N**	Inconel 600	**T**	PTFE ***	**V**	FKM **
O-RING MATERIALS	**B**	NBR	**T**	PTFE	**V**	FKM		
PROCESS CONNECTION SIZES	**02**	1/4″ NPT	**06**	3/4″ NPT	**10**	1-1/4″ NPT		
	04	1/2″ NPT	**08**	1″ NPT	**12**	1-1/2″ NPT		
LOWER HOUSING MATERIALS	**KN**	PVDF	**PV**	PVC	**TG**	PTFE (Glass filled)		
	PP	PP	**TC**	PTFE (Carbon filled)				

Please consult your local NOSHOK Distributor or NOSHOK, Inc. for availability and delivery information.

* NBR o-rings standard with 316SS diaphragm
** FKM o-rings standard with FKM diaphragm
*** PTFE o-rings standard with all other diaphragms

EXAMPLE

Type 10L
Instrument connection size ..... 1/4″ NPT
Upper housing material ..... 316 Stainless Steel
Diaphragm material ..... PTFE
O-ring material ..... PTFE
Process connection size ..... 1/2″ NPT
Lower housing material ..... PP

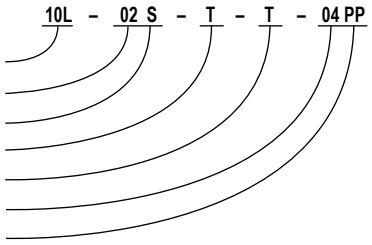

Type 10L PTFE (Carbon & Glass Filled)

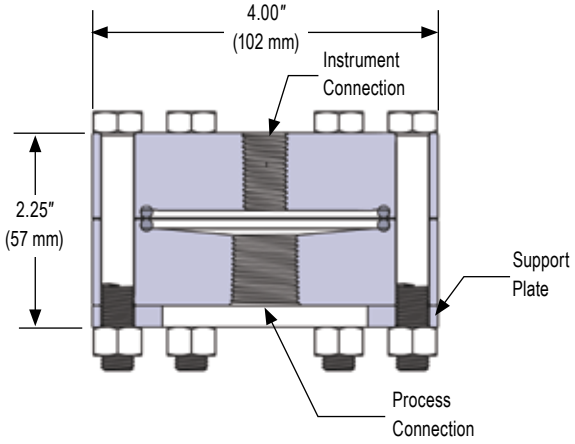

Type 10L PVC / PP / PVDF

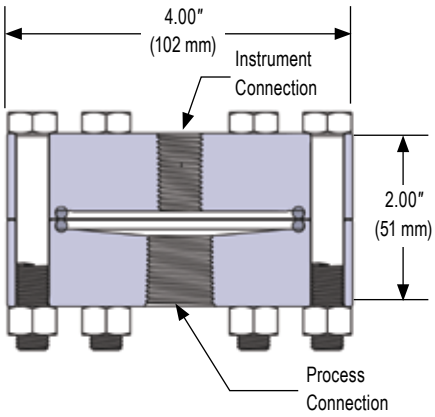

Flow-Through Annular Style



TYPE 40

- Process liquid flowing through the pipe exerts pressure onto a flush-mounted flexible inner cylinder containing clean, captive liquid; completely isolating instrumentation from the process flow and preventing plugging
- Can be used for remote mounting of pressure instrument(s) with capillary
- Instrumentation can be removed for calibration, repair or replacement without interrupting the process flow
- Integral design prevents accidental breakage
- Can be used with a variety of process conditions in many applications
- Eliminates clogging typically associated with diaphragm seals used in viscous fluid applications which can lead to inaccurate pressure readings
- Assembly flanges ASME B16.1 Class 150, 2" to 10"

APPLICATIONS

- Slurries
- Heavy sludges
- Chemical - synthetic polymers
- Diffusers - flow measurement
- Abrasive media

SPECIFICATIONS

Seal type	Inline flanged with sleeve diaphragm			
Instruments	**Type**	**Size**	**Minimum Pressure**	**Maximum Pressure**
	Gauges	2-1/2″ to 6″	0 psig to 30 psig	0 psig to 285 psig
	Transducers	-	0 psig to 30 psig	0 psig to 285 psig
	Switches	-	0 psig to 30 psig	0 psig to 285 psig
Upper housing	Type	Non-continuous duty		
	Connections	1/4″ NPT, 1/2″ NPT		
	Materials	Polyurethane enamel coated Steel, 316 Stainless Steel		
Diaphragm	Size	Sleeve style per ring size		
	Materials	NBR, FKM, EPDM, PTFE (Other materials available on request)		
Flange materials	Connections	Flanged, Class 150, 2″ through 10″		
	Materials	Polyurethane enamel coated Steel, 316 Stainless Steel		
Bolting		Zinc-plated Steel, optional Stainless Steel		
Operating temperature		-30 °F to 140 °F, based on materials of construction and fill fluid		

⚠ **WARNING:** This product can expose you to chemicals including Lead and Nickel, which are known to the State of California to cause cancer and birth defects or other reproductive harm. For more information go to www.P65Warnings.ca.gov

ORDERING INFORMATION								
TYPE	**40**	Annular Ring	**40BT**	Bolt-Through Annular Ring				
INSTRUMENT CONNECTION SIZES	**02**	1/4″ NPT	**04**	1/2″ NPT				
HOUSING MATERIALS	**C**	Carbon Steel	**S**	316 Stainless Steel				
DIAPHRAGM MATERIALS	**B**	NBR	**V**	FKM	**T**	PTFE	**E**	EPDM
PIPE SIZES	**16**	2″ Pipe	**32**	4″ Pipe	**48**	6″ Pipe	**80**	10″ Pipe
	24	3″ Pipe	**40**	5″ Pipe	**64**	8″ Pipe		
FLANGE MATERIALS	**C**	Carbon Steel	**S**	316 Stainless Steel				

Please consult your local NOSHOK Distributor or NOSHOK, Inc. for availability and delivery information.

EXAMPLE

Type 40
Instrument connection size ..... 1/4″ NPT
Housing material ..... Carbon Steel
Diaphragm material ..... NBR
Pipe size ..... 2″ pipe
Flange material ..... Carbon Steel

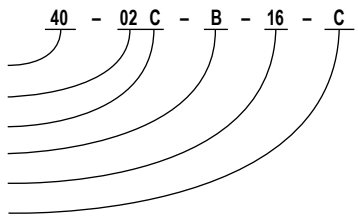

Type 40

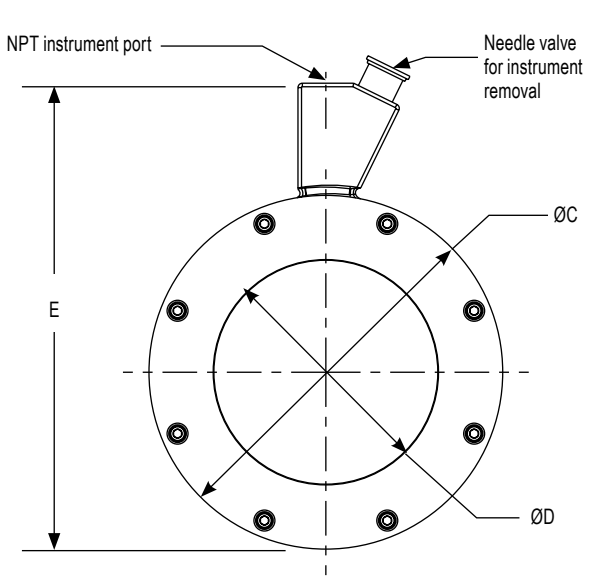

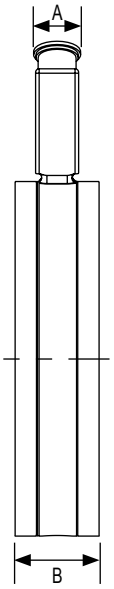

	NOMINAL PIPE SIZE						
	2"	**3"**	**4"**	**5"**	**6"**	**8"**	**10"**
A	0.76" (19 mm)	0.76" (19 mm)	0.76" (19 mm)	0.76" (19 mm)	0.76" (19 mm)	0.76" (19 mm)	0.76" (19 mm)
B	2" (51 mm)	2" (51 mm)	1-1/2" (38 mm)	1-1/2" (38 mm)	1-1/2" (38 mm)	1-1/2" (38 mm)	1-1/2" (38 mm)
C	4-7/32" (107 mm)	5-15/32 (139 mm)	6-9/32" (160 mm)	7-9/16" (192 mm)	8-7/16 (214 mm)	10-5/8" (270 mm)	12-13/16" (325 mm)
D	2" (51 mm)	3" (76 mm)	4" (102 mm)	5" (127 mm)	6" (152 mm)	8" (203 mm)	10" (254 mm)
E	7.18" (182 mm)	8.44" (214 mm)	9.27" 235 mm)	10.53" (267 mm)	11.40 (289 mm)	13.60" (345 mm)	15.77" (400 mm)

All Non-Metallic



TYPE 5

- For wastewater and chemical feed applications, as well as applications with corrosive media
- Constructed of corrosion-resistant PP glass fiber reinforced upper housing and PP, PVC or PVDF lower housing
- Protects pressure instruments used on ultra-pure or highly corrosive fluid lines such as demineralized water, sulfuric acid, hydrochloric acid, and caustics
- PTFE-coated EPDM diaphragms are standard on all assemblies
- 100% non-metallic wetted surfaces assures maximum chemical and temperature compatibility

APPLICATIONS

- Wastewater and chemical feed
- Deionized water systems
- Reverse osmosis systems
- Desalinization systems
- Electroplating

SPECIFICATIONS

Seal type	Threaded with non-replaceable diaphragm			
Instruments	**Type**	**Size**	**Minimum Pressure**	**Maximum Pressure**
	Gauges	2-1/2″ to 6″	0 psig to 30 psig	0 psig to 160 psig
	Transducers	-	0 psig to 30 psig	0 psig to 160 psig
	Switches	-	0 psig to 30 psig	0 psig to 160 psig
Upper housing	Type	Non-continuous duty		
	Connections	1/4″ NPT, 1/2″ NPT		
	Materials	PP, fiberglass reinforced		
Diaphragm	Size	1.77″		
	Displacement	8.9 ml		
	Materials	EPDM, PTFE-coated		
Lower housing	Connections	1/4″ NPT or 1/2″ NPT		
	Materials	PVC, PP or PVDF		
Operating temperature	Operating temperature is determined by the temperature/pressure configuration. See Material Temperature table.			

⚠ **WARNING:** This product can expose you to chemicals including Lead and Nickel, which are known to the State of California to cause cancer and birth defects or other reproductive harm. For more information go to www.P65Warnings.ca.gov

ORDERING INFORMATION						
TYPE	**5**					
INSTRUMENT CONNECTION SIZES	**02**	1/4″ NPT	**04**	1/2″ NPT		
UPPER HOUSING MATERIAL	**PP**	PP				
DIAPHRAGM MATERIAL	**E**	EPDM-PTFE coated on process side				
PROCESS CONNECTION SIZES	**02**	1/4″ NPT*	**04**	1/2″ NPT		
LOWER HOUSING MATERIAL	**PV**	PVC	**PP**	PP	**KN**	PVDF

Please consult your local NOSHOK Distributor or NOSHOK, Inc. for availability and delivery information.

* Only available with 1/4" NPT Instrument Connection

EXAMPLE **5 – 04 PP – E – 04 PV**

Type 5
Instrument connection size ..... 1/2″ NPT
Upper housing material ..... PP
Diaphragm material ..... EPDM-PTFE
Process connection size ..... 1/2″ NPT
Lower housing material ..... PVC

Type 5

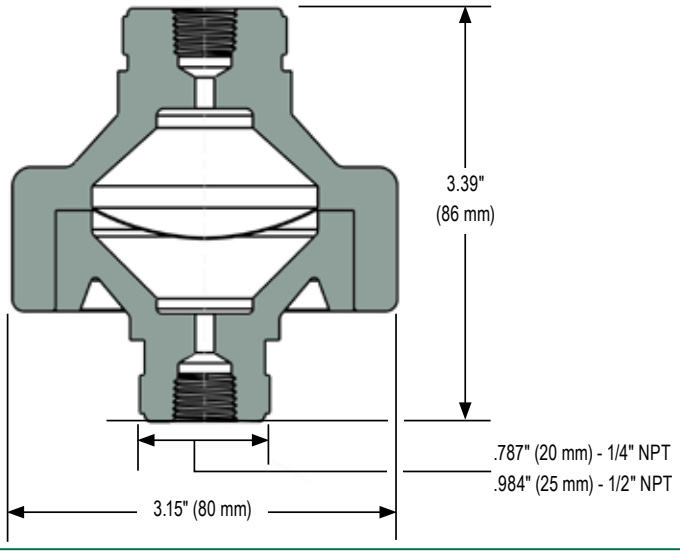

Sanitary, Clamped-Style, ASME-BPE

TYPE 12



- Features a flush mount diaphragm and all welded construction, ideal for food & beverage, pharmaceutical and sanitary markets
- Can be used for remote mounting of pressure instrument(s) with capillary
- Wetted parts and all welded housing are constructed of 316 stainless Steel for greater strength and durability
- Accommodates process connection pipes from 1-1/2″ through 3″ sizes
- Clamped connection allows ease of installation and removal of seal for maintenance and cleaning
- Wetted materials polished to Ra 32 or better
- Consider instrument size, pressure range, media composition, ambient and operating temperature, and maximum working pressure when selecting
- Capillaries and cooling elements are available for elevated process temperatures, see page 24
- Fill fluid must be compatible with process media; i.e. Glycerin may become volatile in conjunction with a strong oxidizing agent such as chlorine, forms of oxygen or peroxide and nitric acids

APPLICATIONS

- Water and wastewater
- Oil and gas
- Petrochemical
- Chemical processing
- Industrial automation
- Food and beverage
- Marine
- Agriculture
- Steel fabrication
- Mud pumping
- Pharmaceutical
- Pulp and paper
- Pneumatic

SPECIFICATIONS

Seal type	Sanitary clamp, welded diaphragm				
Instruments	**Type**	**Size**	**Minimum Pressure**	**Maximum Pressure**	
	Gauges	2-1/2″ to 4″	0 psig to 30 psig	Determined by the clamping device and piping system.	
	Transducers	-	0 psig to 30 psig		
	Switches	-	0 psig to 30 psig		
Upper housing	Type	Continuous duty			
	Connections	1/4″ NPT, 1/2″ NPT			
	Materials	316 Stainless Steel			
Diaphragm		1-1/2″ Pipe	2″ Pipe	2-1/2″ Pipe	3″ Pipe
	Size	1.4″	1.9″	2.4″	2.9″
	Displacement	190 mm^3	490 mm^3	850 mm^3	1,670 mm^3
	Material	316 Stainless Steel			
Operating temperature	Operating temperature is determined by the temperature/pressure configuration. See Material Temperature table.				

⚠ **WARNING:** This product can expose you to chemicals including Nickel, which is known to the State of California to cause cancer. For more information go to www.P65Warnings.ca.gov

ORDERING INFORMATION								
TYPE	**12**							
INSTRUMENT CONNECTION SIZES	**02**	1/4″ NPT	**04**	1/2″ NPT				
UPPER HOUSING MATERIAL	**S**	316 Stainless Steel						
DIAPHRAGM MATERIAL	**S**	316 Stainless Steel						
SANITARY PIPE SIZES	**12**	1-1/2″	**16**	2″	**20**	2-1/2″	**24**	3″
OPTIONAL SANITARY SEAL CLAMPS & GASKETS								
SS ASME-BPE CLAMPS	**CR12**	1-1/2″	**CR16**	2″	**CR20**	2-1/2″	**CR24**	3″
NBR GASKETS	**BG12**	1-1/2″	**BG16**	2″	**BG20**	2-1/2″	**BG24**	3″
PTFE GASKETS	**TG12**	1-1/2″	**TG16**	2″	**TG20**	2-1/2″	**TG24**	3″

Please consult your local NOSHOK Distributor or NOSHOK, Inc. for availability and delivery information.

EXAMPLE

Type 12
Instrument connection size ..... 1/4″ NPT
Upper housing material ..... 316 Stainless Steel
Diaphragm material ..... 316 Stainless Steel
Sanitary pipe size ..... 2-1/2″
SS ASME-BPE clamp (optional) ..... 2-1/2″ clamp
Gasket material (optional) ..... NBR

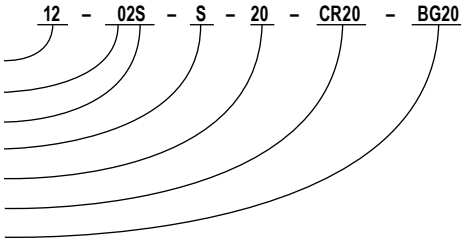

1-1/2″ Nominal Pipe Size

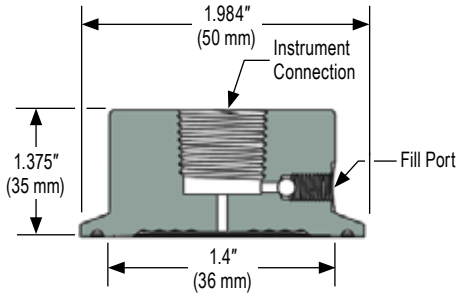

2″ Nominal Pipe Size

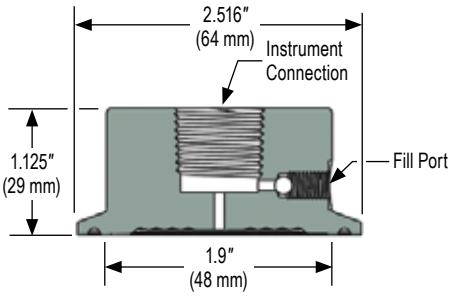

2-1/2″ Nominal Pipe Size

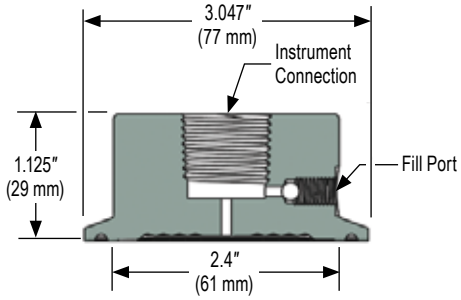

3″ Nominal Pipe Size

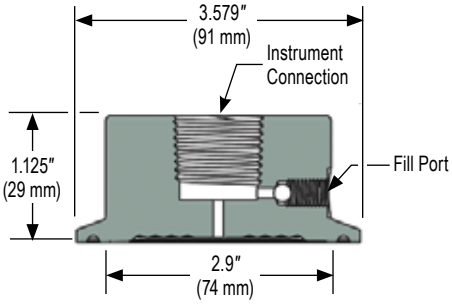

Front Flush

TYPE 20



- Designed for applications requiring an NPT male threaded process connection and with a flush diaphragm
- Flush diaphragm construction prevents clogging and process material build-up
- Constructed with a 316 stainless Steel housing and diaphragm for strength and durability
- Available instrument connection sizes are 1/4" and 1/2" with a process connection size of 1/2" NPT male to 2" NPT male
- Consider instrument size, pressure range, media composition, ambient and operating temperature, and maximum working pressure when selecting
- Capillaries and cooling elements are available for elevated process temperatures, see page 24
- Fill fluid must be compatible with process media; i.e. Glycerin may become volatile in conjunction with a strong oxidizing agent such as chlorine, forms of oxygen or peroxide and nitric acids

APPLICATIONS

- Water and wastewater
- Oil and gas
- Petrochemical
- Chemical processing
- Industrial automation
- Marine
- Agriculture
- Steel fabrication
- Mud pumping
- Pharmaceutical
- Pulp and paper
- Pneumatic



Front flush diaphragm

SPECIFICATIONS

Seal type	Front flush, welded diaphragm					
Instruments	**Type**	**Size**	**Minimum Pressure**		**Maximum Pressure**	
Seal Connection Size 1/2" NPT	Gauges	2-1/2"	0 psig to 1,500 psig		0 psig to 9,000 psig	
	Transducers	-	0 psig to 30 psig		0 psig to 9,000 psig	
	Switches	-	0 psig to 30 psig		0 psig to 9,000 psig	
Seal Connection Size 3/4" NPT	Gauges	2-1/2"	0 psig to 160 psig		0 psig to 9,000 psig	
	Gauges	4" to 4-1/2"	0 psig to 1,500 psig		0 psig to 9,000 psig	
	Transducers	-	0 psig to 30 psig		0 psig to 9,000 psig	
	Switches	-	0 psig to 30 psig		0 psig to 9,000 psig	
Seal Connection Size 1" NPT	Gauges	2-1/2"	0 psig to 160 psig		0 psig to 9,000 psig	
	Gauges	4" to 4-1/2"	0 psig to 1,000 psig		0 psig to 9,000 psig	
	Transducers	-	0 psig to 30 psig		0 psig to 9,000 psig	
	Switches	-	0 psig to 30 psig		0 psig to 9,000 psig	
Upper housing	Type	Continuous duty				
	Connections	1/4" NPT, 1/2" NPT				
	Material	316 Stainless Steel				
Diaphragm		1/2" NPT	3/4" NPT	1" NPT	1-1/2" NPT	2" NPT
	Size	0.7"	0.9"	1.0"	1.6"	2.0"
	Displacement	50 mm^3	100 mm^3	180 mm^3	550 mm^3	1,000 mm^3
	Material	316 Stainless Steel				
Operating temperature	Operating temperature is determined by the temperature/pressure configuration. See Material Temperature table.					

WARNING: This product can expose you to chemicals including Nickel, which is known to the State of California to cause cancer. For more information go to www.P65Warnings.ca.gov

Adaptive Industrial Solutions | sales@adaptiveind.com | (877) 818-5009

ORDERING INFORMATION						
TYPE	**20**					
INSTRUMENT CONNECTION SIZES	**02**	1/4″ NPT	**04**	1/2″ NPT		
HOUSING MATERIAL	**S**	316 Stainless Steel				
DIAPHRAGM MATERIAL	**S**	316 Stainless Steel				
PROCESS CONNECTION SIZES	**04**	1/2″ NPT	**08**	1″ NPT	**16**	2″ NPT
	06	3/4″ NPT	**12**	1-1/2″ NPT		

Please consult your local NOSHOK Distributor or NOSHOK, Inc. for availability and delivery information.

EXAMPLE **20 – 02 S – S – 06**

Type 20
Instrument connection size ..... 1/4″ NPT
Housing material ..... 316 Stainless Steel
Diaphragm material ..... 316 Stainless Steel
Process connection size ..... 3/4″ NPT

1/2″ NPT

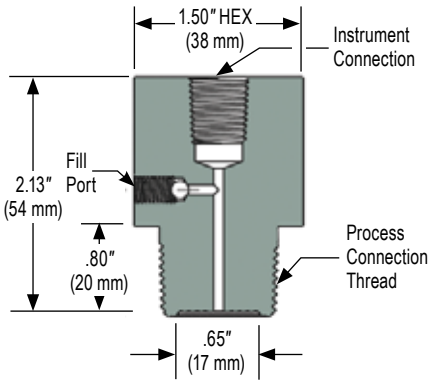

3/4″ NPT

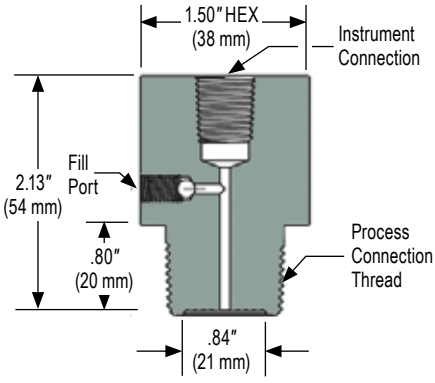

1″ NPT

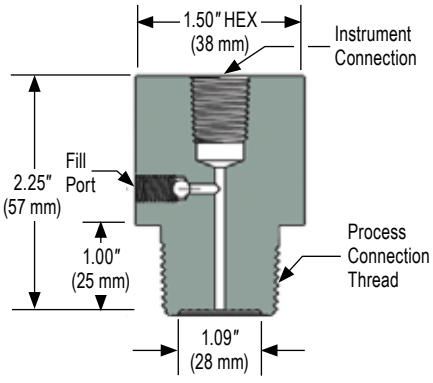

1-1/2″ NPT

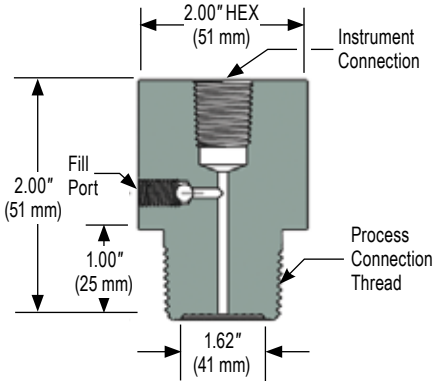

2″ NPT

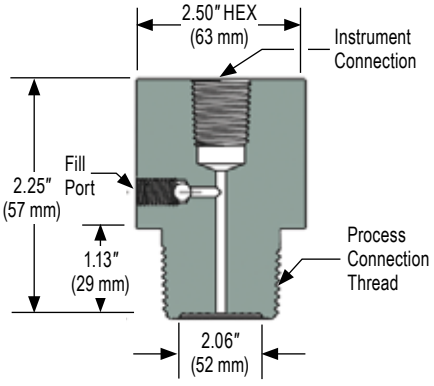

TYPE 25/25H



- Designed to isolate the pressure measuring instrument from corrosive or viscous process media
- Utilize an all welded, all metallic housing design to eliminate potential leak paths
- For use with gauges with dial sizes of 2-1/2" and smaller, and pressure ranges no less than 100 psig
- Housing and diaphragm offered in a variety of materials to suit most applications
- A flushing port is available to clean wetted areas and prevent process media build up
- Consider instrument size, pressure range, media composition, ambient and operating temperature, and maximum working pressure when selecting
- Capillaries and cooling elements are available for elevated process temperatures, see page 24
- Fill fluid must be compatible with process media; i.e. Glycerin may become volatile in conjunction with a strong oxidizing agent such as chlorine, forms of oxygen or peroxide and nitric acids

APPLICATIONS

- Water and wastewater
- Oil and gas
- Petrochemical
- Chemical processing
- Industrial automation
- Marine
- Agriculture
- Steel fabrication
- Mud pumping
- Pulp and paper
- Pneumatic

SPECIFICATIONS

Seal type	Threaded with welded diaphragm			
Instruments	**Type**	**Size**	**Minimum Pressure**	**Maximum Pressure**
	Gauges	2-1/2″	0 psig to 100 psig	0 psig to 2,500 psig (25H - 5,000 psig)
	Transducers	-	0 psig to 60 psig	0 psig to 2,500 psig (25H - 5,000 psig)
	Switches	-	0 psig to 60 psig	0 psig to 2,500 psig (25H - 5,000 psig)
Upper housing	Type	Non-continuous duty		
	Connections	1/4″ NPT, 1/2″ NPT		
	Materials	316 Stainless Steel, Hastelloy C-276, Monel 400, other materials available upon request		
Diaphragm	Size	1.28″		
	Displacement	400 mm^3		
	Materials	316 Stainless Steel, Hastelloy C-276, Monel 400, other materials available upon request		
Lower housing	Connections	1/4″ NPT, 1/2″ NPT		
	Materials	316 Stainless Steel, Hastelloy C-276, Monel 400, other materials available upon request		
	Flushing port	Optional 1/8″ NPT and 1/4″ NPT		
Operating temperature	Operating temperature is determined by the temperature/pressure configuration. See Material Temperature table.			

⚠ **WARNING:** This product can expose you to chemicals including Nickel, which is known to the State of California to cause cancer. For more information go to www.P65Warnings.ca.gov

Adaptive Industrial Solutions | sales@adaptiveind.com | (877) 818-5009

ORDERING INFORMATION								
TYPE	**25**	(2,500 psi)	**25H**	(5,000 psi)				
INSTRUMENT CONNECTION SIZES	**02**	1/4″ NPT	**04**	1/2″ NPT				
UPPER HOUSING MATERIALS	**H**	Hastelloy C-276	**M**	Monel 400	**P**	Carpenter 20	**S**	316 Stainless Steel
DIAPHRAGM MATERIALS	**H**	Hastelloy C-276	**M**	Monel 400 *	**P**	Carpenter 20 *	**S**	316 Stainless Steel
PROCESS CONNECTION SIZES	**02**	1/4″ NPT	**04**	1/2″ NPT				
LOWER HOUSING MATERIALS	**H**	Hastelloy C-276	**M**	Monel 400	**P**	Carpenter 20	**S**	316 Stainless Steel
OPTIONAL FLUSHING CONNECTIONS	**1F**	1/8″ NPT	**2F**	1/4″ NPT				
OPTIONAL FLUSH PORT PLUG	**P**	(Flush port plug will match lower housing material.)						

Please consult your local NOSHOK Distributor or NOSHOK, Inc. for availability and delivery information.

* When selecting a Monel or Carpenter 20 Diaphragm, the upper & lower housing must be the same material

EXAMPLE

25 – 02 P – P – 04 P – 1F

Type 25
Instrument connection size ..... 1/4″ NPT
Upper housing material ..... Carpenter 20
Diaphragm material ..... Carpenter 20
Process connection size ..... 1/2″ NPT
Lower housing material ..... Carpenter 20
Flushing connection (optional) ..... 1/8″ NPT

Type 25 Standard Pressure

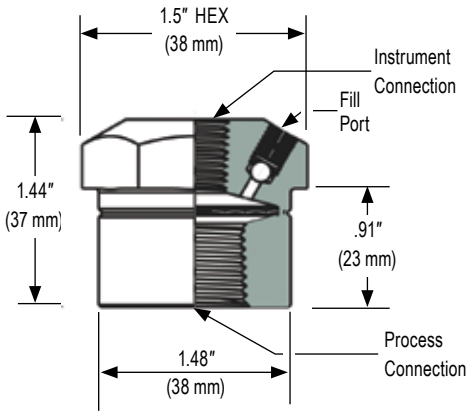

Type 25H Elevated Pressure

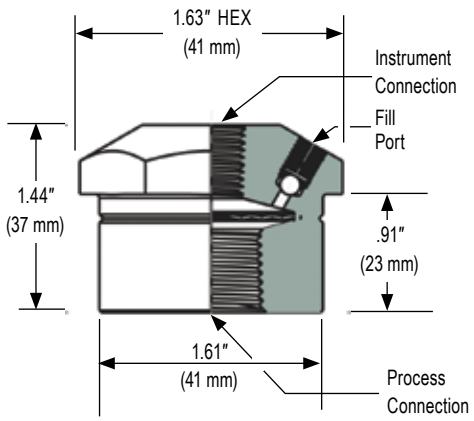

High Volumetric Displacement

TYPE 29



- An off-line seal with a threaded connection and all welded, all metallic housing design that does not utilize an o-ring or gasket
- Can be used for remote mounting of pressure instrument(s) with capillary
- Designed with a larger diameter diaphragm for higher displacement capability
- A variety of upper and lower housing and diaphragm materials are available to suit most applications
- A flushing port is available to clean wetted areas and prevent process media build up
- Consider instrument size, pressure range, media composition, ambient and operating temperature, and maximum working pressure when selecting
- Capillaries and cooling elements are available for elevated process temperatures, see page 24
- Fill fluid must be compatible with process media; i.e. Glycerin may become volatile in conjunction with a strong oxidizing agent such as chlorine, forms of oxygen or peroxide and nitric acids

APPLICATIONS

- Water and wastewater
- Oil and gas
- Petrochemical
- Chemical processing
- Industrial automation
- Marine
- Agriculture
- Steel fabrication
- Mud pumping
- Pulp and paper
- Pneumatic

SPECIFICATIONS

Seal type	Threaded with welded diaphragm.			
Instruments	**Type**	**Size**	**Minimum Pressure**	**Maximum Pressure**
	Gauges	2-1/2″ to 4-1/2″	0 psig to 30 psig	0 psig to 2,500 psig
	Transducers	-	0 psig to 30 psig	0 psig to 2,500 psig
	Switches	-	0 psig to 30 psig	0 psig to 2,500 psig
Upper housing	Type	Continuous duty		
	Connections	1/4″ NPT, 1/2″ NPT		
	Materials	316 Stainless Steel, Hastelloy C-276, Monel 400, other materials available upon request		
Diaphragm	Size	2.1″		
	Displacement	1.5 ml		
	Materials	316 Stainless Steel, Hastelloy C-276, Monel 400, other materials available upon request		
Lower housing	Connections	1/4″ NPT, 1/2″ NPT, 3/4″ NPT, 1″ NPT		
	Materials	316 Stainless Steel, Hastelloy C-276, Monel 400, other materials available upon request		
	Flushing port	Optional 1/8″ NPT and 1/4″ NPT		
Operating temperature	Operating temperature is determined by the temperature/pressure configuration. See Material Temperature table.			

⚠ **WARNING:** This product can expose you to chemicals including Nickel, which is known to the State of California to cause cancer. For more information go to www.P65Warnings.ca.gov

Adaptive Industrial Solutions | sales@adaptiveind.com | (877) 818-5009

ORDERING INFORMATION								
TYPE	29							
INSTRUMENT CONNECTION SIZES	02	1/4″ NPT	04	1/2″ NPT				
UPPER HOUSING MATERIALS	H	Hastelloy C-276	M	Monel 400	P	Carpenter 20	S	316 Stainless Steel
DIAPHRAGM MATERIALS	H	Hastelloy C-276	M	Monel 400*	P	Carpenter 20*	S	316 Stainless Steel
PROCESS CONNECTION SIZES	02	1/4″ NPT	04	1/2″ NPT				
LOWER HOUSING MATERIALS	H	Hastelloy C-276	M	Monel 400	P	Carpenter 20	S	316 Stainless Steel
OPTIONAL FLUSHING CONNECTIONS	1F	1/8″ NPT	2F	1/4″ NPT				
OPTIONAL FLUSH PORT PLUG	P	(Flush port plug will match lower housing material.)						

Please consult your local NOSHOK Distributor or NOSHOK, Inc. for availability and delivery information.

* When selecting a Monel or Carpenter 20 Diaphragm, the upper & lower housing must be the same material

EXAMPLE

29 – 02 S – S – 06 S – 1F

Type 29
Instrument connection size ..... 1/4″ NPT
Upper housing material ..... 316 Stainless Steel
Diaphragm material ..... 316 Stainless Steel
Process connection size ..... 3/4″ NPT
Lower housing material ..... 316 Stainless Steel
Flushing connection (optional) ..... 1/8″ NPT

Type 29

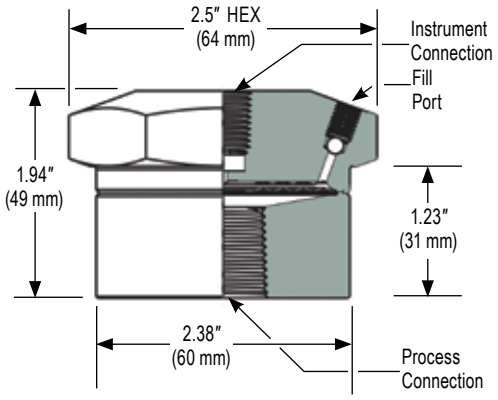

Standard & Elevated Pressure, Bolted

TYPE 30/30H



- Utilizes an all metallic diaphragm welded to the upper housing to allow field replacement of the lower housing while maintaining continuity of the measuring system
- Can be used for remote mounting of pressure instrument(s) with capillary
- A wide variety of instrument and process connections are available
- A flushing port is available to clean wetted areas and prevent process media build up
- Consider instrument size, pressure range, media composition, ambient and operating temperature, and maximum working pressure when selecting
- Capillaries and cooling elements are available for elevated process temperatures, see page 24
- Fill fluid must be compatible with process media; i.e. Glycerin may become volatile in conjunction with a strong oxidizing agent such as chlorine, forms of oxygen or peroxide and nitric acids

APPLICATIONS

- Water and wastewater
- Oil and gas
- Petrochemical
- Chemical processing
- Industrial automation
- Marine
- Agriculture
- Steel fabrication
- Mud pumping
- Pulp and paper
- Pneumatic

SPECIFICATIONS

Seal type	Threaded with welded diaphragm (Flanged available on request)			
Instruments	**Type**	**Size**	**Minimum Pressure**	**Maximum Pressure**
	Gauges	2-1/2″ to 6″	0 psig to 30 psig	0 psig to 2,500 psig (30H - 5,000 psig)
	Transducers	-	0 psig to 30 psig	0 psig to 2,500 psig (30H - 5,000 psig)
	Switches	-	0 psig to 30 psig	0 psig to 2,500 psig (30H - 5,000 psig)
Upper housing	Type	Continuous duty		
	Connections	1/4″ NPT, 1/2″ NPT		
	Materials	Polyurethane enamel coated Steel, 316 Stainless Steel		
Diaphragm	Size	2.4″		
	Displacement	1.5 ml		
	Materials	316 Stainless Steel (Exotic materials available on request)		
Gaskets	Type 30	Klingersil C-440, PTFE and FKM		
	Type 30H	FEP encapsulated o-ring (5,000 psi)		
Lower housing	Connections	1/4” NPT, 1/2” NPT, 3/4” NPT, 1” NPT, 1-1/4” NPT and 1-1/2” NPT		
	Materials	Polyurethane enamel coated Steel, 316 Stainless Steel (Exotic materials available on request)		
	Flushing port	Optional 1/8″ NPT, 1/4″ NPT and dual ports		
Bolting		Zinc-plated Steel, optional Stainless Steel		
Operating temperature		Operating temperature is determined by the temperature/pressure configuration. See Material Temperature table.		

⚠ **WARNING:** This product can expose you to chemicals including Lead and Nickel, which are known to the State of California to cause cancer and birth defects or other reproductive harm. For more information go to www.P65Warnings.ca.gov

Adaptive Industrial Solutions | sales@adaptiveind.com | (877) 818-5009

ORDERING INFORMATION								
TYPE	**30**	(2,500 psi)	**30H**	(5,000 psi)				
INSTRUMENT CONNECTION SIZES	**02**	1/4″ NPT	**04**	1/2″ NPT				
UPPER HOUSING MATERIALS	**C**	Carbon Steel	**P**	Carpenter 20	**U**	Titanium Grade 2		
	M	Monel 400	**S**	316 Stainless Steel				
DIAPHRAGM MATERIALS	**A**	Tantalum	**M**	Monel 400 *	**P**	Carpenter 20 *	**U**	Titanium Grade 4 *
	H	Hastelloy C-276	**N**	Inconel 600	**S**	316 Stainless Steel		
SEAL GASKET MATERIALS	**F**	FEP encapsulated o-ring (5,000 psi)	**T**	PTFE				
	R	Klingersil C-4401 (Rated to 1,500 psi)	**V**	FKM				
PROCESS CONNECTION SIZES	**02**	1/4″ NPT	**06**	3/4″ NPT	**10**	1-1/4″ NPT		
	04	1/2″ NPT	**08**	1″ NPT	**12**	1-1/2″ NPT		
		(ASME and DIN Flanges Available Upon Request)						
LOWER HOUSING MATERIALS	**C**	Carbon Steel	**M**	Monel 400	**P**	Carpenter 20	**U**	Titanium Grade 2
	H	Hastelloy C-276	**N**	Inconel 600	**S**	316 Stainless Steel		
OPTIONAL FLUSHING CONNECTIONS	**1F**	1/8″ NPT	**2F**	1/4″ NPT				
OPTIONAL FLUSH PORT PLUG	**P**	(Flush port plug will match lower housing material.)						

Please consult your local NOSHOK Distributor or NOSHOK, Inc. for availability and delivery information.

* When selecting a Monel 400, Carpenter 20 or Titanium Grade 4 Diaphragm, the upper housing must be the same material

EXAMPLE

30 – 04 S – S – R – 04 S – 1F

Type 30
Instrument connection size ..... 1/2″ NPT
Upper housing material ..... 316 Stainless Steel
Diaphragm material ..... 316 Stainless Steel
Seal gasket material ..... Klingersil C-4401
Process connection size ..... 1/2″ NPT
Lower housing material ..... 316 Stainless Steel
Flushing connection (optional) ..... 1/8″ NPT

Type 30 Standard Pressure

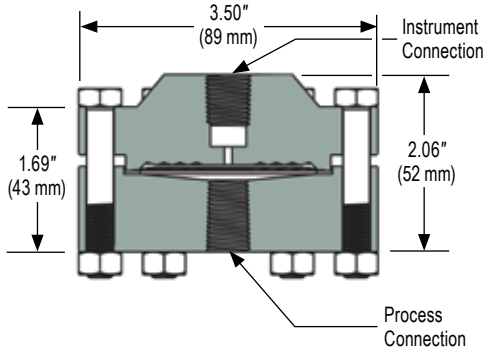

Type 30H Elevated Pressure

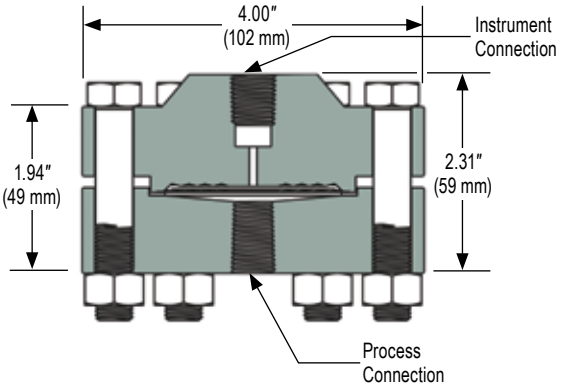

Reduced Pressure, Non-Metallic Lower, Bolted

TYPE 30L



- Designed for applications where typical metallic lower housings cannot withstand process media
- Can be used for remote mounting of pressure instrument(s) with capillary
- Utilizes an all metallic diaphragm welded to the upper housing to allow replacement of the non-metallic lower housing while maintaining continuity of the measuring system
- Consider instrument size, pressure range, media composition, ambient and operating temperature, and maximum working pressure when selecting
- Fill fluid must be compatible with process media; i.e. Glycerin may become volatile in conjunction with a strong oxidizing agent such as chlorine, forms of oxygen or peroxide and nitric acids

APPLICATIONS

- Water and wastewater
- Oil and gas
- Petrochemical
- Chemical processing
- Industrial automation
- Marine
- Agriculture
- Steel fabrication
- Mud pumping
- Pulp and paper
- Pneumatic

SPECIFICATIONS

Seal type	Threaded with welded diaphragm (Flanged available on request)			
Instruments	**Type**	**Size**	**Minimum Pressure**	**Maximum Pressure**
	Gauges	2-1/2″ to 6″	0 psig to 30 psig	0 psig to 200 psig
	Transducers	-	0 psig to 30 psig	0 psig to 200 psig
	Switches	-	0 psig to 30 psig	0 psig to 200 psig
Upper housing	Type	Continuous duty		
	Connections	1/4″ NPT, 1/2″ NPT		
	Materials	Polyurethane enamel coated Steel, 316 Stainless Steel		
Diaphragm	Size	2.4″		
	Displacement	1.5 ml		
	Materials	316 Stainless Steel, FKM, PTFE (Exotic materials available on request)		
Gasket	NBR, PTFE and FKM			
Lower housing	Connections	1/4” NPT, 1/2” NPT, 3/4” NPT, 1” NPT, 1-1/4” NPT and 1-1/2” NPT		
	Materials	PVDF, PP, PVC, PTFE (Other materials available on request)		
Bolting	Zinc-plated Steel, optional Stainless Steel			
Operating temperature	Operating temperature is determined by the temperature/pressure configuration. See Material Temperature table.			

⚠ **WARNING:** This product can expose you to chemicals including Lead and Nickel, which are known to the State of California to cause cancer and birth defects or other reproductive harm. For more information go to www.P65Warnings.ca.gov

ORDERING INFORMATION							
TYPE	**30L**						
INSTRUMENT CONNECTION SIZES	**02**	1/4″ NPT	**04**	1/2″ NPT			
UPPER HOUSING MATERIALS	**C**	Carbon Steel	**P**	Carpenter 20	**U**	Titanium Grade 2	
	M	Monel 400	**S**	316 Stainless Steel			
DIAPHRAGM MATERIALS	**A**	Tantalum	**M**	Monel 400 *	**P**	Carpenter 20 *	**U** Titanium Grade 4 *
	H	Hastelloy C-276	**N**	Inconel 600	**S**	316 Stainless Steel	
SEAL GASKET MATERIALS	**R**	Klingersil C-4401	**T**	PTFE	**V**	FKM	
PROCESS CONNECTION SIZES	**02**	1/4″ NPT	**06**	3/4″ NPT	**10**	1-1/4″ NPT	
	04	1/2″ NPT	**08**	1″ NPT	**12**	1-1/2″ NPT	
		(ASME and DIN flanges available upon request)					
LOWER HOUSING MATERIALS	**KN**	PVDF	**PV**	PVC	**TG**	PTFE (glass filled)	
	PP	PP	**TC**	PTFE (Carbon filled)			

Please consult your local NOSHOK Distributor or NOSHOK, Inc. for availability and delivery information.

* When selecting a Monel 400, Carpenter 20 or Titanium Grade 4 diaphragm, the upper housing must be the same material

EXAMPLE

30L – 02 C – S – R – 06 PV

Type 30L
Instrument connection size ..... 1/4″ NPT
Upper housing material ..... Carbon Steel
Diaphragm material ..... 316 Stainless Steel
Seal gasket material ..... Klingersil C-4401
Process connection size ..... 3/4″ NPT
Lower housing material ..... PVC

Type 30L PTFE Carbon / PTFE Glass

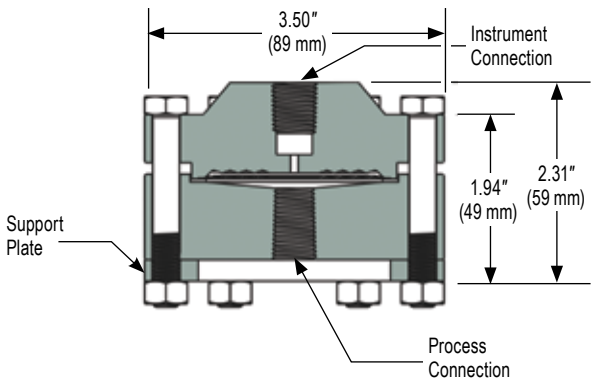

Type 30L PVC / PP / PVDF

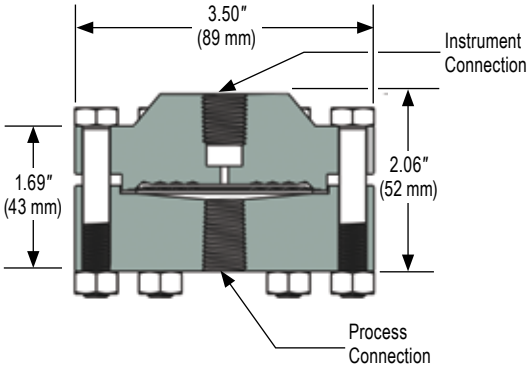

NOSHOK

PLAIN AND ARMORED CAPILLARIES *, **

- Stainless Steel capillaries available with or without stainless Steel armor
- Protects the instrument from high or low process temperatures
- Allows remote mounting of pressure instrument(s)
- Select the shortest capillary length possible, as changes in ambient temperature conditions may significantly affect the accuracy and response time of the instrument
- Standard length 5', others available
- Installation on analog gauges requires a gauge support and gauge adaptor, or other surface mounting provisions
- Any level difference between the instrument and the seal will result in a pressure indication error; make sure to compensate for the level difference during calibration of the diaphragm seal assembly if the level difference is known



COOLING ELEMENTS **

- Works in combination with diaphragm seal to isolate instrument from high media temperatures
- Recommended for process temperatures above 212 °F
- Requires direct mounted system
- Effective temperature reductions of 200 °F depending upon ambient conditions
- High >212 °F process temperature, low < -40 °F process temperature
- All stainless Steel construction



NOSHOK Flexible Capillaries	Part Number
5' SS armored capillary 1/4" NPT	AC-02-02-5
Custom length per foot	AC-02-02-#
5' SS armored capillary 1/2" NPT	AC-04-04-5
Custom length per foot	AC-04-04-#
5' SS plain capillary 1/4" NPT	PC-02-02-5
Custom length per foot	PC-02-02-#
5' SS plain capillary 1/2" NPT	PC-04-04-5
Custom length per foot	PC-04-04-#

NOSHOK Cooling Element	Part Number
1/4" NPT x 1/4" NPT, 4.68"	1/4-NPT-Cooling-Element
1/2" NPT x 1/2" NPT, 4.68"	1/2-NPT-Cooling-Element

NOSHOK Sanitary Clamps and Gaskets	Part Number
ASME-BPE Sanitary Clamp	
1-1/2" Tube OD	CR-12
2" Tube OD	CR-16
2-1/2" Tube OD	CR-20
3" Tube OD	CR-24
NBR Gasket	
1-1/2" Tube OD	BG-12
2" Tube OD	BG-16
2-1/2" Tube OD	BG-20
3" Tube OD	BG-24
PTFE Gasket	
1-1/2" Tube OD	TG-12
2" Tube OD	TG-16
2-1/2" Tube OD	TG-20
3" Tube OD	TG-24

For products that contain Brass or Carbon Steel:

⚠ **WARNING:** This product can expose you to chemicals including Lead, which is known to the State of California to cause cancer and birth defects or other reproductive harm. For more information go to www.P65Warnings.ca.gov

For products that contain Stainless Steel:

⚠ **WARNING:** This product can expose you to chemicals including Nickel, which is known to the State of California to cause cancer. For more information go to www.P65Warnings.ca.gov

Adaptive Industrial Solutions | sales@adaptiveind.com | (877) 818-5009

SANITARY CL ASKETS**

- Clamp-style fittings are constructed of T304 stainless Steel; T316 stainless Steel on request
- Double hinge design for easy installation and removal
- Available in sizes from ¾″ to 4″
- Standard pressure rating of 500 psi at 70 °F (21 °C); up to 3,000 psi rating on request
- Clamp gaskets are available in NBR, EPDM, PTFE and FKM
- All clamps and gaskets meet FDA and 3A sanitary standards



Fill Fluid Temperature Table

Recommended Temperature Range				
Fill Fluid	**Viscosity (cSt)**	**Vacuum/ Compound**	**Pressure**	**E_t (1/°F)**
Glycerin (99.7%)	1,110	N/A	60 °F to 462 °F	0.000294
Silicone 200	5	-130 °F to 176 °F	-130 °F to 356 °F	0.000588
Silicone 200	50	-4 °F to 250 °F	-4 °F to 392 °F	0.000582
Silicone 200, Food Grade	350	N/A	0 °F to 572 °F	0.000533
Silicone 510	50	-60 °F to 250 °F	-60 °F to 400 °F	0.000533
Silicone 550	125	-40 °F to 325 °F	-40 °F to 450 °F	0.000520
Silicone 710	500	0 °F to 348 °F	0 °F to 500 °F	0.000430
HaloCarbon 4.2 Oil	4	-40 °F to 176 °F	-40 °F to 347 °F	0.000565
Syltherm 800	9	4 °F to 392 °F	-40 °F to 750 °F	0.000962
Mineral Oil	57	-4 °F to 338 °F	-4 °F to 482 °F	0.000356
Neobee M-20	10	-10 °F to 200 °F	-10 °F to 400 °F	0.000511

Material Temperature Table

Material	Pressure Limit	Temperature Limit
O-Ring Temperature Limits		
NBR	—	-40 °F to 250 °F
PTFE	—	-40 °F to 400 °F
FKM	—	-10 °F to 400 °F
Diaphragm Pressure and Temperature Limits		
PTFE	2,000 psi	-40 °F to 400 °F
FKM	2,000 psi	-10 °F to 400 °F
Metallic diaphragms determined by pressure range of seal type, restricted to temperature range of fill fluid.		
Bottom Housing Material Maximum Pressure & Temperature Limits		
TG, TC	200 psi	150 °F
PVDF	200 psi	180 °F
PVC	200 psi	74 °F
PVC	125 psi	125 °F
PVC	80 psi	150 °F
PP	200 psi	140 °F
Metallic lower housings determined by pressure range of seal type, restricted to temperature range of fill fluid.		

Type 5 Diaphragm Seal Pressure/Temperature Diagrams

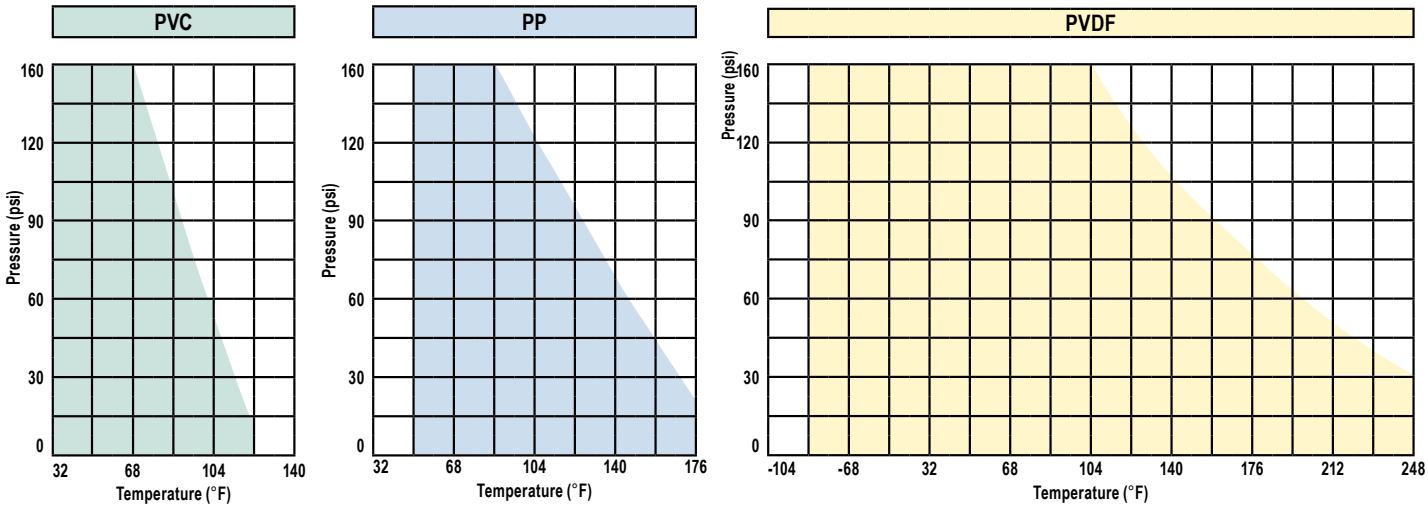

These values are a guide for harmless media against which the material of the seal is resistant.
Durability of wear and tear parts is depending on the operating conditions of the application. Values below 32 °F (PP < 50 °F) on request with exact data of operation.

Diaphragm Seals Thermal Error Calculations - Types 10, 25, 25H, 30

Three major factors contribute to thermal error:

1) Type of fill fluid used
2) Fill fluid volume
3) Diaphragm flexibility

The choice of fill fluid in Table I contributes directly to thermal errors in proportion to the coefficient of thermal expansion of the fluid. The resulting internal pressures produce adverse forces on the diaphragm which in turn are reflected in the pressure instrument.

The fill volumes in Table II & Table III contribute significantly to thermal errors. The greater the fill volume the greater volumetric expansion. Whenever possible, fill volumes should be minimized. If fill volumes cannot be adjusted, choose a fluid with the lowest coefficient of thermal expansion. The flexibility of the diaphragm is expressed as a spring rate (Table II). The smaller the diaphragm, the greater the spring rate. Any force used to move the diaphragm is considered an error because it subtracts from a direct reading of the pressure. Not only does it take more force to push a smaller diaphragm (spring bias), but high spring rates also reflect greater thermal errors when internal pressures push on it. It is desirable to have the lowest spring rate possible.

The thermal error (Err) can be expressed by the equations below. The first error formula (1) assumes a uniform gradual heating of the entire filled system. The second error formula (2) is used when the diaphragm, capillary and pressure instrument are at different temperatures and a thermal gradient exists.

Table I. Fill Fluid Expansion Factors

Recommended Temperature Range				
Fill Fluid	**Viscosity (cSt)**	**Vacuum/ Compound**	**Pressure**	**E_t(1/°F)**
Glycerin (99.7%)	1,110	N/A	60 °F to 462 °F	0.000294
Silicone 200	5	-130 °F to 176 °F	-130 °F to 356 °F	0.000588
Silicone 200	50	-4 °F to 250 °F	-4 °F to 392 °F	0.000582
Silicone 200, Food Grade	350	N/A	0 °F to 572 °F	0.000533
Silicone 510	50	-60 °F to 250 °F	-60 °F to 400 °F	0.000533
Silicone 550	125	-40 °F to 325 °F	-40 °F to 450 °F	0.000520
Silicone 710	500	0 °F to 348 °F	0 °F to 500 °F	0.000430
HaloCarbon 4.2 Oil	4	-40 °F to 176 °F	-40 °F to 347 °F	0.000565
Syltherm 800	9	4 °F to 392 °F	-40 °F to 750 °F	0.000962
Mineral Oil	57	-4 °F to 338 °F	-4 °F to 482 °F	0.000356
Neobee M-20	10	-10 °F to 200 °F	-10 °F to 400 °F	0.000511

Table II. Diaphragm Spring Rates and Volumes

Diaphragm Diameter Inches	Applicable Type	R_s	V_s
1.28	25 25H	10,000	0.19 0.12
2.10	29	2,600	0.85
2.40	30	800	0.18
3.00	10	240	0.48

Table III. Accessory Internal Volume

Component	Volume
Capillary (1)	0.053"/ft^3
2" Nipple	0.024"/ft^3
2" Nipple	0.048"/ft^3

(1). Volume is based on capillary 1/8" (3.17 mm) O.D. x 0.025" (0.635 mm) wall

---

Equation 1

Err = $(T)(E_t)(R_s)(V_T)$ expressed in inches H_20

Where:

T = The number of degrees of the temperature change (°F).
E_t = The coefficient of thermal expansion of the fill liquid (the volumetric change constant of the fill liquid per °F).
R_s = The spring rate of the process diaphragm (inches H_20 pressure change/inch^3 of fill liquid volume change).
V_T = The total volume of the fill fluid in the diaphragm seal system (inches^3).

Equation 2

Err = $[(T_s \times V_s) + (T_p \times V_p \times L) + (T_p \times V_p)]\ [E_t]\ [R_s]$ expressed in inches H_20

Where:

V_T = $V_s + V_p L + V_D$
V_T = Total volume of filled system (inches^3)
V_s = Volume of seal (inches^3)
V_p = Volume of capillary (inches^3/foot of length)
V_D = Volume of inst. device (inches^3)
L = Length of capillary (feet)
T_s = Change in temperature of liquid in seal (°F)
T_p = Change in temperature of liquid in capillary (°F)
T_D = Change in temperature of liquid in inst. device (°F)

In order to analyze the significance of these temperature induced errors, it is helpful to express the error as a % of measured span. This can easily be done by the following equation:

$$\text{Error \%} = \frac{\text{Err}}{\text{Measured Span (in inches } H_20)} \times 100$$

QUALITY POLICY

NOSHOK is committed to providing a high degree of value and continually improving processes to enhance customer satisfaction by focusing on requirements for pressure, temperature, and level measurement instrumentation and related products.

TO DOWNLOAD OR ORDER CATALOGS,
VISIT WWW.NOSHOK.COM

All from world class technology.

Combined with real-world stamina.

The highest value with the industry's best warranty.

And all from a company with a 50+ year record of customer satisfaction.

All from your Single Source Instrumentation Company.

NOSHOK

Adaptive Industrial Solutions
sales@adaptiveind.com
(877) 818-5009

Web: www.noshok.com

FSC Mixed Sources
Product group from well-managed forests, controlled sources and recycled wood or fibre
www.fsc.org Cert no. SW-COC-002929
© 1996 Forest Stewardship Council

ISO 9001:2015
REGISTERED

Catalog NK13DSS-2