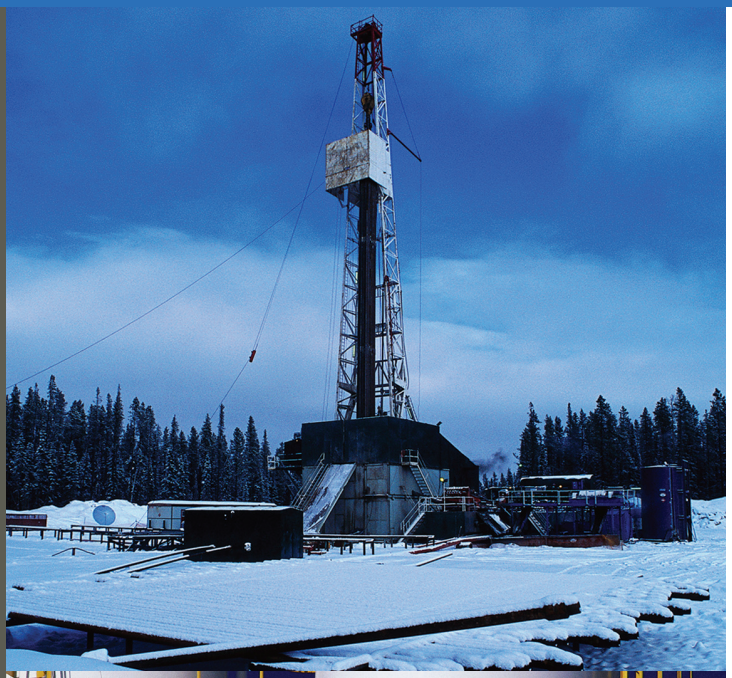





WaveNet

Wireless Monitoring





RC SYSTEMS

www.rcsystemsco.com

WAVENET WIRELESS MONITORING

The RC Systems WaveNet Wireless Monitoring System consists of 1-32 battery-powered WaveCast Monitors (WCM) and at least one 32 channel WaveLink Receiver (WLR). WLRs take advantage our NRTL certified and field proven ST-90 hardware, but with newly designed firmware. A single WLR Multi-Interface option module is all that is required to add data logging, second wired and wireless Modbus port, plus a Wi-Fi port with web-server. The Wi-Fi feature is especially exciting since it allows remote HMI functionality via any web enabled device. This means our WLRs allow responders to view real time and historical data on smart phones and tablet devices prior to entering a hazardous area!

The battery powered wireless WaveCast Monitor (WCM) descends from our popular ST-48 wireless transmitter and is compatible with existing ST-48 systems. WCM enhancements include power On/Off via the magnetic wand, dual gas sensors, easier battery replacement, plus the ability to separate the sensor up to 15 feet using a 4 wire sensor separation kit.

The new WaveNet Wireless Monitoring System is designed for easy deployment of both permanent and temporary monitoring sites.

WaveCast Monitor



WaveLink Receiver



FEATURES - WaveCast Monitor (WCM)

- Supports single or dual and local or remote "Smart" temperature compensated sensor modules
- Alarms, gas range and other parameters are stored in the Smart Sensor module and may be edited by the user. Changes are periodically broadcast to the WaveLink Receivers to insure identical readings at all locations
- Allows restore of factory settings from Smart Sensor plus backup and subsequent restore of user settings if parameters are accidently lost
- Password protected with LOW and HIGH security levels
- Easy to change lithium battery
- Three adjustable independent alarm levels per sensor
- Readouts include Eunits, bar graphs, 1-hour trends
- "Legacy" setting makes WaveCast devices compatible with all RC Systems controllers
- Magnetic mount option available
- License free 900MHz or 2.4 GHz FHSS client and server network
- 5 front panel LEDs indicate alarms and communication status
- Suitable for Division 2 hazardous locations
- Available either in rugged cast aluminum or economical and durable UL-94 injection molded enclosure

FEATURES - WaveLink Receiver (WLR)

- Displays monitored readings and alarms from 1 to 32 WaveCast Monitors
- Requires little setup since all channel parameters are periodically received from WaveCast Sensors via the wireless network
- Includes 8 programmable 5-amp relays to control lights,horns, fans etc
- "Acknowledge" feature allows audible devices to be silenced during alarms
- Graphic LCD displays large Eunits and bar graph for each active channels
- Clock / Calendar time and date stamps "Event Log" sensor items including Power-Up, Alarms, Calibration and Com Errors
- 100-240 VAC or 10-30 VDC standard power making it ideal for solar powered installations
- 900 MHz and 2.4 GHz FHSS models
- Touch and magnetic keypads are standard for non-intrusive operation
- Password protected with LOW and HIGH security levels

10-0410 MULTI-INTERFACE OPTION

- Wi-Fi access point for web enabled devices to view WaveLink embedded webpages including real time and historical sensor readings, channel parameters, and remote setup capability
- Data logger stores more than 1 year of readings and alarm history
- RS-485 and wireless Modbus Slave port for transmitting WaveNet data to our ST-71 Sixteen Channel and ST-72 64 Channel Controllers

System Setup

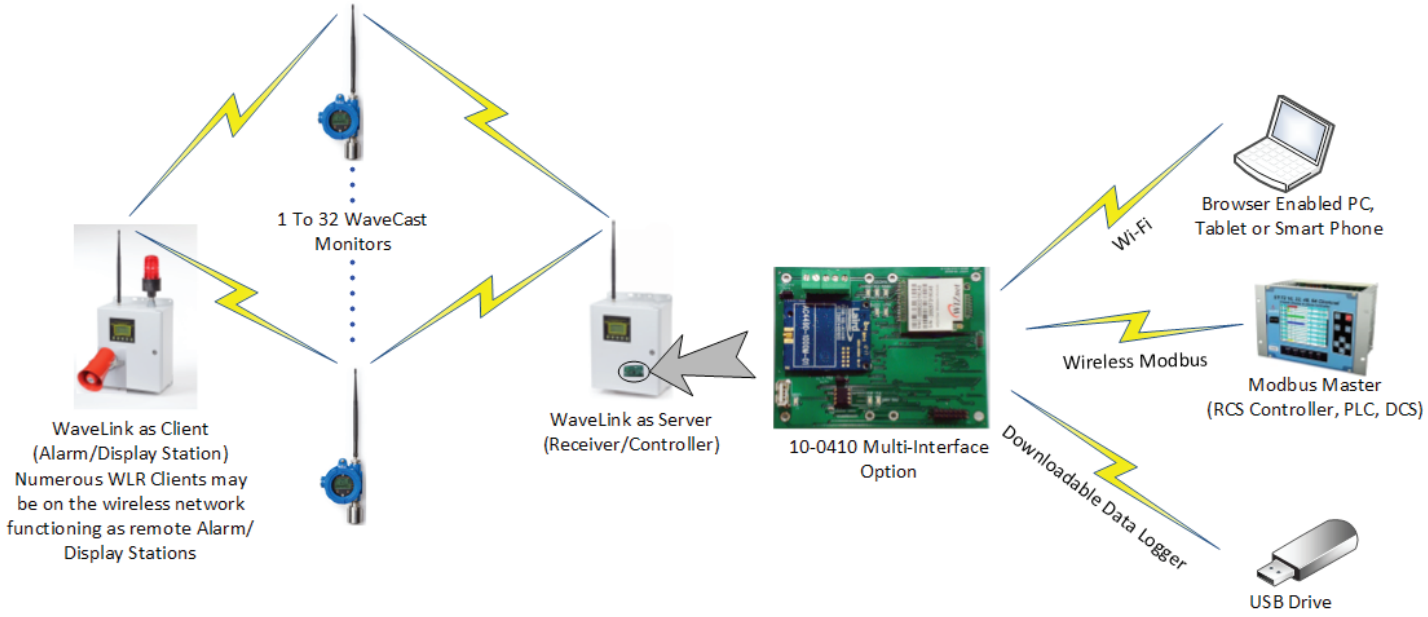

A typical WaveNet FHSS Client / Server wireless monitoring system consists of one WaveLink Receiver (WLR) configured as the network's Server, receiving wireless data from up to 32 Single Gas, or 16 Dual Gas, WaveCast Monitors (WCMs). Additional WLRs may also receive the same WCM data and act as remote alarm stations and displays, but must be configured as a Clients since only one Server is permitted per network. WCMs are powered by an internal lithium battery while WLR's require either 100-240 VAC or 10-30VDC and are very easy to solar power.

The 10-0410 Multi-Interface Module is a plug in PCB option which adds a tremendous amount of functionality and is easily added to WaveLink Receivers. Features added by the 10-0410 include Data Logging of > 1 year of readings and alarms, a WiFi web server sending monitored data to browser enabled smart devices, and RS-485 / FHSS Wireless Modbus slave ports for transferring data to Modbus master devices such as RC Systems ST-72 Sixty Four Channel Controllers.

Accessories

Sensor Separation Kit 10-0411



Shown with 10-0247 stainless steel sensor head

The 10-0411 Sensor Separation Kit allows WCM smart sensors to be mounted up to 10 feet away from the WCM. WCMs may be configured as single or dual sensor monitors so either one or two 10-0411 Sensor Separation kits may be connected to each WCM. When combined with the 10-0247 Stainless Steel sensor head, the 10-0411 is suitable for Division 2 hazardous locations.

WaveRelayer/Alarm Bar





Two Light 10-30VDC Alarm Bar for Division 2 Hazardous Locations

The WaveNet Relayer (WNR) receives Alarm Status data from wireless WCM sensors for activating up to five configurable 5 amp SPDT relays. Relays may be configured to activate based upon 3 distinct alarm levels, Comm Error/Fault and Low Battery conditions. Add our Quick Connector option and cabling to make it easy to wire Relayers to 2/4 Alarm Bar light stack annunciators!

Order WNR-90 or WNR-24 for appropriate 900MHz or 2.4GHz WaveNet Monitoring Systems. Suitable for Division 2 Hazardous Areas. Available options include Single or Dual, Division 2 rated local Strobe Lights. Quick Connector Option allows easy connection to Alarm Bars for both Ordinary and Hazardous Locations

Additional Plug-In and other Accessories

RC Systems has an offering of plug-in options for configuring a fit-for-purpose system and easily changing components as requirements vary. Other accessories are also available.





30 Watt solar power supply with 55AH battery; Div 2



Tripod



Yagi Antenna
2.4GHz
1000-2309

Straight Rubber antenna
900MHz and 2.4GHz
1000-2189
1000-2300



Antenna lightning Protector
1000-2310



Antenna Base Station 2.4GHz, Collinear

1000-2312

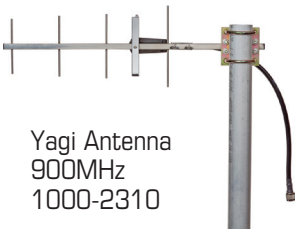

Yagi Antenna
900MHz
1000-2310

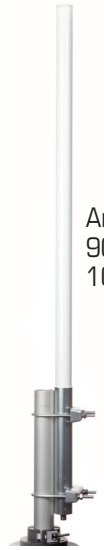

Antenna Base Station
900MHz, Collinear
10-0289



Four Light 10-30VDC Alarm Bar for Division 2 Hazardous Locations



Four Light 10-30VDC Alarm Bar for Ordinary Locations (Shown with three strobes)



Sun Shield for Improved LCD Readout Visibility



RP-TNC Low Coax Antenna Cable (See Guide)



Quick Connect Cable Sets



110 Decibel Horn Suitable for Division 2 Hazardous Areas



Two Light 10-30VDC Alarm Bar for Division 2 Hazardous Locations



Two Light 10-30VDC Alarm Bar for Ordinary Locations



Antenna, 2 dBi Dipole, Division 1



Power Supply, DIN Rail, 24VDC 50 Watt



WaveCast Monitor (WCM) Replacement Lithium Battery



Multicolor Strobe
(*Not Shown*: Clear or Purple Strobes or Green Solid)



Stand, WaveCast Monitor

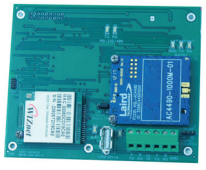

WLR Multi-function Option

WAVECAST MONITOR

WCMAL90-Single/Dual	Single or Dual channel 900 MHz monitor (rubber dipole antenna included) suitable for Div 2 installation
WCMAL24-Single/Dual	Single or dual channel 2.4 GHz monitor (rubber collinear antenna included) suitable for div 2 installation
WCMPY90-Single/Dual	Single or Dual channel 900 MHz monitor (rubber dipole antenna included); UL-94 injection molded enclosure (dual requires at least one Sensor Separation kit)
WCMPY24-Single/Dual	Single or Dual channel 2.4 GHz monitor (rubber dipole antenna included); UL-94 injection molded enclosure (dual requires at least one Sensor Separation kit)

OPTIONS/ACCESSORIES

10-0381	Series 4 EC smart sensor board (artic heater standard)
10-0392	Series 4 low powered IR smart sensor board
10-0247	Smart sensor head stainless steel (CSA IS / XP)
10-0247IS	Smart sensor head stainless steel without sinter
10-0411	WCM XP sensor separation kit with 15ft com cable (includes 10-0247)
10-0203	Sensor head calibration adaptor
10-0198	Sensor head splash guard with remote calibration port
10-0322	Magnetic mounting kit for instrument enclosure (2 magnets)

SPARE PARTS

1000-2691	Replacement WCM battery with pull tab
1000-2215	Explosion-Proof Enclosure (Limatherm)
10-0403	Replacement board for 10-0411 sensor separation kit
1000-2720	Replacement 15 ft. Data cable for 10-0411 separation kit
10-0404-C	Replacement WCM display/radio board (less radio)
10-0407	Replacement WCM battery board (less battery)
10-0400	3/4 NPT 900 MHz antenna fitting RP-TNC suitable for Div 2 areas
10-0401	3/4 NPT 2.4 GHz antenna fitting RP-TNC suitable for Div 2 areas

WAVENET RELAYER

WNRAL90/WNRAL24	Suitable for Div 2 installation; 32 Channel 900MHz or 2.4 GHz wireless Relayer/Repeater; five configurable 5amp SPDT relays
WNRPY90/WNRPY24	UL-94 injection molded enclosure 32 channel 900MHz or 2.4GHz wireless Relayer/Repeater; five configurable 5amp SPDT relays

OPTIONS/ACCESSORIES

10-0322	Magnetic mounting kit for instrument enclosure (2 magnets)
AB4G/AB4H	Four light 10-30VDC alarm bar for general purpose or Div 2 Hazardous locations
AB2G/AB2H	Two light 10-30VDC alarm bar for general purpose or Div 2 Hazardous locations
10-0281	110 decibel horn suitable for Div 2 hazardous areas
10-0284	Red strobe light suitable for Div 2 hazardous areas
10-0285	Amber strobe light suitable for Div 2 hazardous areas
10-0316	Blue strobe light suitable for Div 2 hazardous areas
1000-2757	Alarm Bar Cable; 15 meter
1000-2756	Alarm Bar Cable; 8 meter
1000-2755	Alarm Bar Cable; 3 meter

SPARE PARTS

1000-2215	Explosion-Proof Enclosure (Limatherm)
10-0404-R	Replacement WNR display/radio board (less radio)
10-0425	Replacement WNR relay/power supply board
10-0400	3/4 NPT 900 MHz antenna fitting RP-TNC suitable for Div 2 areas
10-0401	3/4 NPT 2.4 GHz antenna fitting RP-TNC suitable for Div 2 areas

WAVENET ANTENNAS

1000-2189	Antenna, 900 MHz dipole, rubber, Div 2
1000-2193	Antenna, 900 MHz, dipole, explosion-proof, Div 1
1000-2310	Antenna, 900 MHz, Yagi, Stainless Steel
10-0289	Antenna, 900 MHz collinear, 8 dBi Fiberglass Omni Base Station
1000-2300	Antenna, 2.4 GHz collinear, rubber, Div 2
1000-2301	Antenna, 2.4 GHz, dipole, explosion-proof, Div 1
1000-2309	Antenna, 2.4 GHz Yagi, 12DBi, tilt mount
1000-2312	Antenna, 2.4 GHz collinear, 9 dBi Fiberglass Omni Base Station
1000-2188	Replacement WCM/WNR 900 MHz radio module
1000-2454	Replacement WCM/WNR 2.4 GHz radio module
10-0328	Replacement WLR 900 MHz board kit (includes antenna and cable)
10-0355	Replacement WLR 2.4 GHz board kit (includes antenna and cable)
1000-2732	Antenna 900MHz spring base 2dBi dipole omni
1000-2733	Antenna 2.4GHz spring base 4dBi dipole omni

WAVELINK RECEIVER

WLRPY90/WLRPY24	Poly N4 32 channel 900MHz or 2.4GHz wireless receiver (includes 1000-2189)
WLRPS90/WLRPS24	Painted carbon steel N4 32 Channel 900MHz or 2.4GHz wireless receiver (Includes 1000-2189)
WLRSS90/WLRSS24	316 Stainless Steel N4 32 Channel 900MHz or 2.4 GHz wireless receiver (Includes 1000-2189)
WLRN790/WLRN724	Explosion proof N7 32 channel 900MHz or 2.4GHz wireless receiver (Includes 1000-2193)

OPTIONS/ACCESSORIES

10-0410	Multi-interface board with standard data-logging and wired Modbus 485/232 slave port
10-0410-1	Multi-interface board with standard data-logging and wireless Modbus 485/232 slave port with 900 MHz Wireless Modbus radio kit
10-0410-2	Multi-interface board with standard data-logging and wireless Modbus 485/232 slave port with 2.4 GHz Wireless Modbus radio kit
10-0410-3	Multi-interface board with standard data-logging, wired Modbus 485/232 slave port and Wi-Fi radio kit with embedded web page
10-0410-4	Multi-interface board with standard data-logging, wireless Modbus 485/232 slave port, 900 MHz Wireless Modbus radio kit and Wi-Fi radio kit with embedded web page
10-0410-5	Multi-interface board with standard data-logging, wireless Modbus 485/232 slave port, 2.4 GHz Wireless Modbus radio kit and Wi-Fi radio kit with embedded web page
10-0319	Magnetic mounting kit (includes 4 magnets)
10-0334	30 Watt solar power supply with 55AH battery; Div 2
10-0333	Fiberglass tripod mounting kit with clamps and 8 FT. aluminum pole
AB4G/AB4H	Four light 10-30VDC alarm bar for general purpose or Div 2 Hazardous locations
AB2G/AB2H	Two light 10-30VDC alarm bar for general purpose or Div 2 Hazardous locations
10-0281	110 decibel horn suitable for Div 2 hazardous areas
10-0284	Red strobe light suitable for Div 2 hazardous areas
10-0285	Amber strobe light suitable for Div 2 hazardous areas
10-0316	Blue strobe light suitable for Div 2 hazardous areas
10-0382	WLR Sunshield
1000-2259	50 watt AC/DC power supply module; Div 2
1000-2373	120 Watt AC/DC power supply module; Div 2
1000-2498	Transmitter stand (requires 1000-2499)
1000-2499	1.5" Pole mount bracket plate with U-Bolt (requires 1000-2498)

SPARE PARTS

10-0214-WLR	Replacement WLR display board
10-0215	Replacement WLR mother board without radio and relay boards
10-0222	Replacement WLR discrete relay board (6 relays)
1000-1992	Fuse, 2 AMP on motherboard
1000-2638	Quick connector; 3/4" NPT; Div 2, Generation 2
1000-2641	Quick connector; female 3/4" NPT for XP sensor J-box end; Div 2
1000-2639	Quick connector; panel; Div 2, Generation 2
1000-2640	Lockfast cable guard; Div 2, Generation 2
1000-2620	3 Meter cable set; Div 2, Generation 2
1000-2621	8 Meter cable set; Div 2, Generation 2
1000-2622	15 Meter cable set; Div 2, Generation 2
1000-2482	Antenna Cable, PR-TNC, 50 feet, Low Loss

* All cables offered in armored cable style (call for details)
** Call for details regarding additional cable sizes.



NEMA 4X Polyester Enclosure



NEMA 7 Aluminum Enclosure



NEMA 4X 316 Staineless Steel Enclosure



NEMA 4 Powder Coated Carbon Steel



WaveCast 900 MHZ Single Gas Monitor Polycarbonate



WaveCast 2.4 GHZ Single Gas Monitor N4X Cast Aluminum



SPECIFICATIONS

RELAYS

Relays are Form C 5AMP @ 30VDC and 240VAC resistive

PERFORMANCE

2.4GHz frequency range: 2400 - 2483.5 MHz with 42 hops
2.4GHz conducted transmit power is 125mW / 21dBm
2.4GHz indoor/urban range: Up to 1500 feet with 7dBi collinear antenna
2.4GHz outdoor RF LOS range: Up to two miles with high-gain antenna
2.4GHz receiver sensitivity: -98dBm
900MHz frequency range: 902 - 928 MHz with 50 hops
900MHz conducted transmit power (selectable): 10mW-1W/ 0-30dBm
900MHz indoor/urban range: Up to 3000 feet with 2dBi dipole antenna
900MHz outdoor RF LOS range: Up to five miles with high-gain antenna
900MHz receiver sensitivity : -100dBm

DISPLAY

64 x 128 pixel LCD

AMBIENT TEMPERATURE RANGE

-10 - 60 degrees C

POWER SUPPLY

10 - 30 VDC at less than 2 watts

RC SYSTEMS

Adaptive Industrial Solutions
sales@adaptiveind.com
(877) 818-5009

www.rcsystemsco.com