ALUMINUM CASE CONTRACTOR GAUGE SERIES



Model BR651D
Aluminum Case Contractor Gauge Series

MODEL BR651D

FEATURES:

Model BR651D from Blue Ribbon Corporation is a rugged, lightweight Contractor pressure gauge, designed to meet the needs of contractors involved in HVAC, plumbing, and industrial and commercial refrigeration applications. The aluminum case provides lightweight durability with the reliability that comes with the Blue Ribbon contractor series.

SPECIFICATIONS:

- Available dial size: 4.5"
- Aluminum Case (For rust and corrosion resistance)
- Lead Free Brass
- Glass Lens
- Accuracy: ±1%; (AMSE B40.1, Grade 1A)
- Adjustable pointer on dial
  (For additional fine tuning)
- Large, easy to read numbers
  (On single scale PSI only dial)

RANGE	RANGE CODES	MAJOR	MINOR
30" HG VAC	A	5" HG	2" HG
30/0/30	CC	5 PSI	1 PSI
30/0/100	CE	10 PSI	1 PSI
30/0/160	CF	25 PSI	2.5 PSI
0/15	B	2.5 PSI	0.25 PSI
0/30	C	5 PSI	1 PSI
0/60	D	10 PSI	1 PSI
0/100	E	10 PSI	1 PSI
0/160	F	20 PSI	2 PSI
0/200	G	20 PSI	2 PSI
0/300	H	50 PSI	5 PSI
0/400	I	50 PSI	5 PSI
0/500	J	50 PSI	5 PSI
0/600	K	50 PSI	5 PSI

APPLICATIONS:

- HVAC
- Plumbing
- Refrigeration
- Steam heated processes*

***Note:** a pigtail siphon should always be used when putting pressure gauge into steam service.

BR5SL-G-009
REV-D

© 2016 Blue Ribbon Corp. **Adaptive Industrial Solutions**
sales@adaptiveind.com | (877) 818-5009

DIMENSIONAL DRAWING

All dimensions are in inches (mm)

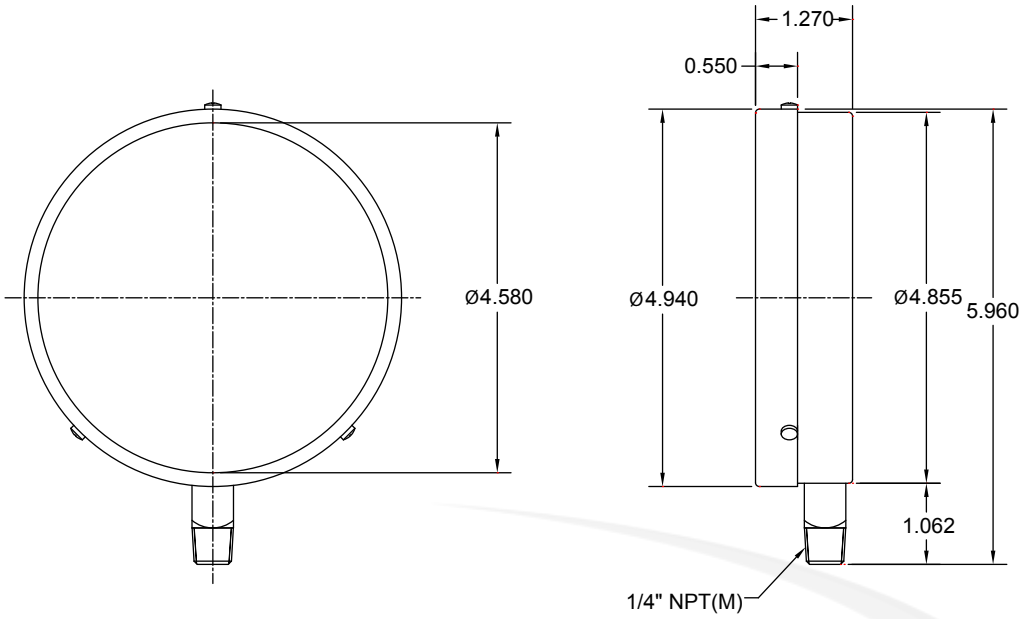

BR651D-454E
CONTRACTOR GAUGE, 4.5" 1/4" NPT, LM
0/100 PSI

ORDERING GUIDE

Example: BR651D454F

BR651	D	45	4	F
Model Number		**Dial Size**	**Connector Size**	**Pressure Range**
651 - bottom connect		4.5" - 45	4 - ¼" NPT	See chart on page 1
Fill Type				
D - dry, non-filled				

All specifications are for reference purposes only. In the interests of continuous product improvement, all specifications are subject to change without notice. Please contact Blue Ribbon Corporation for assistance with your application.

© 2016 Blue Ribbon Corp. **Adaptive Industrial Solutions**

sales@adaptiveind.com | (877) 818-5009