Application Note
Wet Gas Scrubbers

Oil & Gas: Refinery

In a typical refinery, crude oil goes through an initial separation in the Crude Distillation Unit (CDU). The heavier liquids at the bottom of the CDU are referred to as “Gas Oils” and are subjected to additional conversions to make them into higher value hydrocarbons. This secondary process is done at the Fluid Catalytic Cracking Unit (FCCU). As the name suggests a powdered catalyst is used for this reaction. The active component in the catalyst is the mineral zeolite. When combined with the gas oils at high temperature the zeolite helps to break the long chain hydrocarbon molecules into shorter chain molecules that form naptha, gasoline, and fuel oil.

A byproduct of the FCCU process is flue gas. The flue gas contains many impurities. The main acidic component is sulfur dioxide (SO_2). When released into the environment SO_2 creates acid rain; thus the gas must be treated before reaching the atmosphere. The most common method is through a wet gas scrubber. A simplified layout of a wet gas scrubber is shown below. The hot flue gas passes through the absorber where misting nozzles form a dense curtain of liquid. The liquid reagent helps to cool the flue gas, neutralize the SO_2 in the flue gas, as well as trap any particulate matter in the gas. Liquid collects in the bottom of the scrubber where caustic soda (NaOH) is added to prevent the formation of sulfuric acid (H_2SO_4). The scrubbed gas continues upward through the vessel passing through filters prior to release into the atmosphere. Waste collected at the bottom of the scrubber is pumped off for additional treatment. This waste contains sulfites such as $NaHSO_3$ and Na_2SO_3 along with residual catalyst fines and precipitated solids. Solids removal is done through a clarifier using flocculation to settle out the solids. Remaining dissolved sulfites are converted to less aggressive sulfates through forced air oxidation.

Measurement challenges

pH is one of the main measurements in the wet gas scrubber. The flue gas flow rate and changing crude oil feedstock can vary the concentrations of SO_2. A setpoint of 6.0 to 6.5 pH helps balance the corrosive effects of sulfuric acid with the high cost of NaOH reagent. pH is best measured in the recirculation piping to the misting nozzles. The challenges of the scrubber pH measurement are as follows:

- **High temperature**
- **Corrosive high sulfide environment**
- **Abrasive particulates (catalyst fines)**

pH is also measured downstream of the scrubber in the oxidation towers. The measurements are crucial to waste treatment however reduced temperatures and solids make these measurements less demanding on the pH sensor.

Wet Gas Scrubber Downstream from FCCU

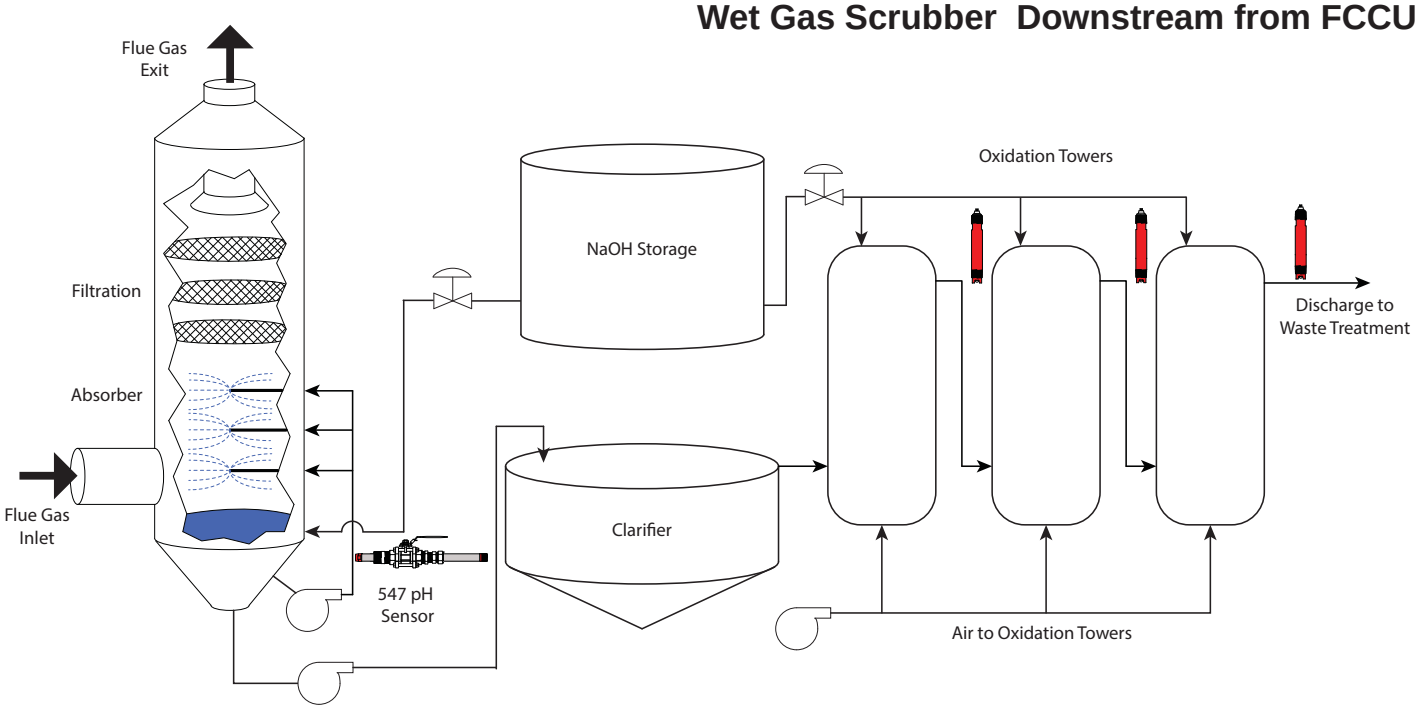

Figure 1

Application Note
Wet Gas Scrubbers

The Solution

Barben Analytical Performance Series pH sensors have a long history of success in scrubber applications. High sulfides can attack the Ag/AgCl element in the reference half cell of the pH sensor. The Barben Axial Ion Path® reference technology helps to combat the degradation of the reference by filtering out sulfides so they cannot poison the sensor while still maintaining a strong signal path. This same filtering principle is also highly effective in keeping particulate matter from plugging the reference cell.

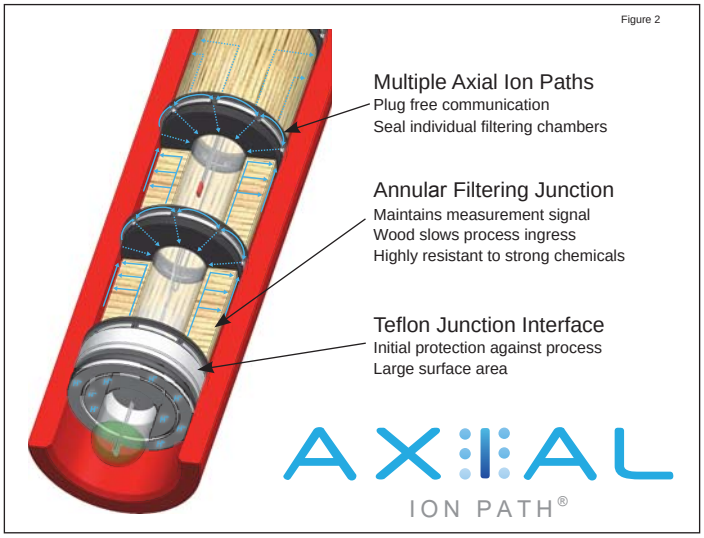

Historically, many scrubber pH measurements have been made on sample lines. While this simplifies cleaning and calibration of the sensor it may not provide the best response time for adequate pH control. Barben Analytical recommends mounting the pH sensor directly on the recirculation piping using a retractable sensor such as the 547 or 567 “Hot Tap” sensor. Installation in the recirculation piping improves speed of response while the liquid flow rate helps keep build-up from forming on the electrode tip. Material of construction should be either Hastelloy or Kynar to best deal with the corrosive nature of the process. Barben sensors should be specified with “FG” or “CF” flat glass electrodes to best deal with abrasion from particulates.

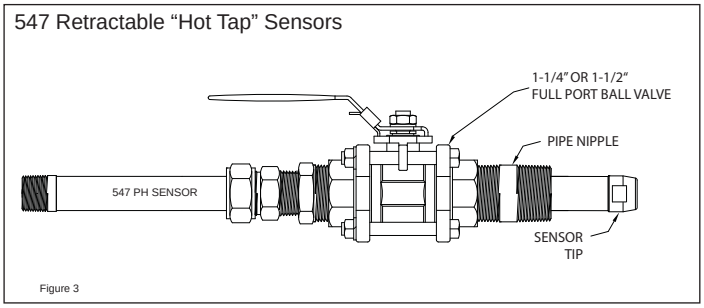

pH measurement on the oxidation towers is often done on the piping between each tower. As mentioned, these applications are less aggressive thus the 547 hot tap sensor or the Barben 546 sensor on a sample line works well. The 546 sensor used 3/4” threads thus can be installed in conventional pipe tees as seen below.

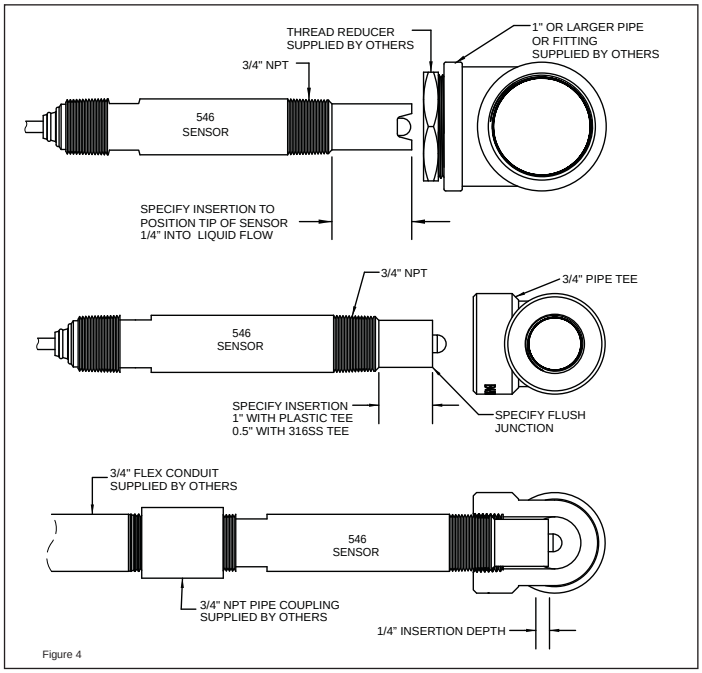

Barben pH sensors will easily connect to most modern pH analyzers in use today. Wiring diagrams for commonly available instruments can be found on www.BarbenAnalytical.com or via request from technical support.

Barben Analytical reserves the right to make technical changes or modify the contents of this document without prior notice. We reserve all rights in this document and in the subject matter and illustrations contained within.

Kynar® is a registered trademark of Elf Atochem North America Inc.
Hastelloy® is a registered trademark of Haynes Intl Inc.

© 2015, by AMETEK, Inc. All rights reserved • Wet_Gas_FCC_Scrubber_AN_RevA • August, 2015