# ALL STAINLESS STEEL GAUGE




Model BR301L

## MODEL BR300

## FEATURES:

The Model BR300 series from Blue Ribbon Corporation is a high-quality dry or liquid-filled, all stainless steel back or bottom mount gauge for applications where brass may not be an option.

## SPECIFICATIONS:

- 304 Stainless Steel Case with bayonet bezel design
- 316 Stainless Steel Internals
- Stainless Steel Bourdon Tube & Connection
- IP65 Enclosure
- Glycerine fill standard, Dry available
- Accuracy: 2½" Dial - 1.6%; (ASME B40.1, Grade A)
- 4" and 6" Dials - 1%; (ASME B40.1, Grade 1A)
- Dual Scale: PSI & BAR (x100=kPa)
- Ambient Temperature: Filled: +30 °F to +160 °F; Dry: -30 °F to +180 °F
- Safety Glass Lens
- Welded Socket
- Overpressure Limit: 30% FSO
- Working Pressure: 75% FSO

## FIELD OPTIONS:

- 2½", 4", 4½",and 6" dial sizes
- ¼"(M) NPT on 2½" and 4"
- ½"(M) NPT on 4" and 6"
- Front Flange (FF) or Back Flange (BF) Mount
- U-Clamp Mount (UC)
- Brass internals available
- Solid Front Design Safety Case
- Consult Factory

| RANGE | RANGE CODES | MAJOR | MINOR |
|---|---|---|---|
| 30/0" VAC | A | 5 | 0.5 |
| 30/0/15 | CB | 5 | 0.5 |
| 30/0/30 | CC | 10 | 1 |
| 30/0/60 | CD | 10 | 1 |
| 30/0/100 | CE | 20 | 2 |
| 30/0/150 | CF | 20 | 2 |
| 30/0/300 | CH | 50 | 10 |
| 0/15 | B | 2 | 0.2 |
| 0/30 | C | 5 | 0.5 |
| 0/60 | D | 10 | 1 |
| 0/100 | E | 20 | 2 |
| 0/160 | F | 20 | 2 |
| 0/200 | G | 40 | 2 |
| 0/300 | H | 50 | 5 |
| 0/400 | I | 50 | 5 |
| 0/500 | J | 100 | 10 |
| 0/600 | K | 100 | 10 |
| 0/800 | L | 100 | 10 |
| 0/1000 | M | 200 | 20 |
| 0/1500 | N | 200 | 20 |
| 0/2000 | O | 400 | 50 |
| 0/3000 | P | 500 | 50 |
| 0/4000 | Q | 500 | 50 |
| 0/5000 | R | 1000 | 100 |
| 0/6000 | S | 2000 | 200 |
| 0/10,000 | U | 2000 | 200 |
| 0/15,000 | V | 2000 | 200 |

© 2016 Blue Ribbon Corp. **Adaptive Industrial Solutions**

sales@adaptiveind.com | (877) 818-5009

## DIMENSIONAL DRAWING

All dimensions are in inches (mm)

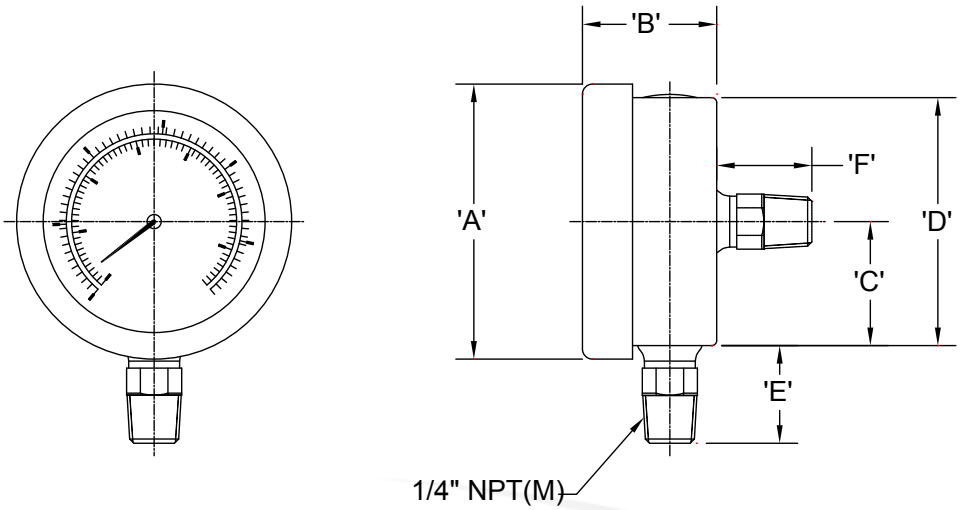


| DIAL SIZE | 'A' | 'B' | 'C' | 'D' | 'E' | 'F' |
|---|---|---|---|---|---|---|
| Ø2.50 (1/4) | 2.745 | 1.96 | 1.238 | 2.475 | 0.975 | 0.975 |
| Ø2.50 (1/2) | 2.745 | 1.96 | 1.238 | 2.475 | 1.37 | 1.37 |
| Ø4.00 (1/2) | 4.35 | 1.96 | 1.963 | 3.925 | 1.37 | 1.37 |
| Ø6.00 (1/2) | 6.35 | 1.96 | 2.925 | 5.85 | 1.37 | 1.37 |

## ORDERING GUIDE

Example: BR301L254F

| **BR301** | **L** | **25** | **4** | **F** |
|---|---|---|---|---|
| **Model Number** | | **Dial Size** | **Connector Size** | **Pressure Range** |
| **301 - bottom connect** | | 2.5" - 25 | 4 - ¼" NPT | See chart on page 1 |
| **302* - back connect** | | 4" - 40 | 2 - ½" NPT | |
| **Fill Type** | | 6" - 60 | | |
| D - dry, non-filled | | | | |
| L - Liquid, glycerine filled | | | | |

*Available in Front Flange (FF), Back Flange (BF), and U-Clamp (UC) Mount

All specifications are for reference purposes only. In the interests of continuous product improvement, all specifications are subject to change without notice. Please contact Blue Ribbon Corporation for assistance with your application.

© 2016 Blue Ribbon Corp. **Adaptive Industrial Solutions**
sales@adaptiveind.com | (877) 818-5009