Model ULAS Single-Tube Lantern Flow Indicators (patented)

FEP Teflon® Lined (patented)

- Approved by the Factory Mutual System (150º F max)
- Available in any length up to 72 inches
  (Max length for FM approved models per specifications below)
- Stock lengths are 8 and 12 inches
- Full 360° unobstructed visibility
- All-welded construction, flanges and support rods
- Patented one-piece SuperSeal inserts are self-sealing
- Wetted part is one-piece FEP Teflon®, flared over SuperSeal insert
- Available with sanitary fittings
- Threaded end connections available
- Design is double sealed
- Excellent for corrosive, viscous, or sanitary service
- Sight tubing can be calibrated directly
- Custom design available; consult factory
- Optional 304 or 316 SS construction
- ANSI Class 300 lb flanges available



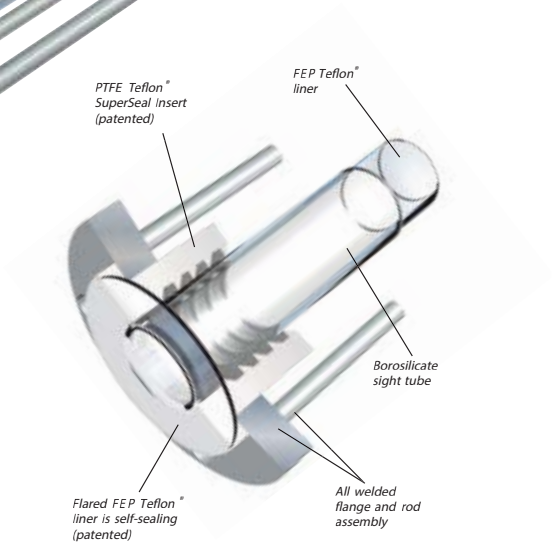

Standard Construction

- FEP Teflon® sight tube, one piece
- PTFE Teflon® SuperSeal inserts
- Borosilicate sight tube sleeve
- Carbon steel shield and flanges, epoxy coated
- ANSI Class 150 lb flanges

Model ULAS Specifications

Indicator size, in.	Sight tube material	Sleeve tube size, in.	Sleeve tube material	Indicator rating, psig	Flange size, in. ANSI 150	Max length FM approved, in.
1.00	FP	1.00	PI	150	1.00	48
1.25	FP	1.50	HW	285(1)	1.50	60
1.50	FP	1.50	PI	135	1.50	48
1.65	FP	2.00	HW	285(1)	2.00	60
2.00	FP	2.00	PI	115	2.00	48
2.75	FP	3.00	HW	200	3.00	48
3.00	FP	3.00	PI	95	3.00	48
4.00	FP	4.00	HW	100	4.00	12
4.00	FP	4.00	PI	85	4.00	48
6.00	FP	6.00	PI	60	6.00	48
8.00	FP	8.00	PI	40	8.00	48

FP = FEP Teflon® PI = Standard Borosilicate HW = Heavywall Borosilicate

Note: (1) Actual flange pressure rating may be less based on material selected.

Model ULAS Single-Tube Lantern Flow Indicator - Teflon® Lined

Specifications for Ordering

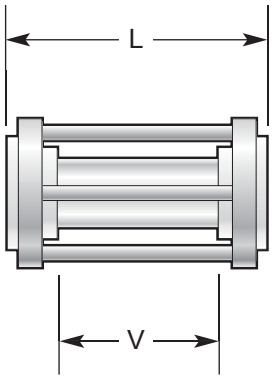

Note: Visual length (V) is 3 inches less than overall length (L).

Indicator Part Number

Use the spaces below to generate the model number for your indicators. Codes for materials and diameters are from the chart below right.

Overall length (L), inches	Indicator model	Sight tube material	Sight tube size	Flange/rod material	Flange size	Sleeve material	Sleeve tube size
	ULAS	FP					

❑ Illuminator

Example Part No: 8.25-ULAS-FP20-CS20-PI20

8.25	8.25 inches overall length
ULAS	Single Tube Lantern Flow Indicator, Teflon® lined
FP	FEP Teflon® sight tube
20	2.0-inch sight tube size
CS	Carbon steel rods and flanges
20	2.0-inch, 150-lb flanges
PI	Borosilicate sight tube sleeve
20	2.0-inch sight tube sleeve size

Codes for Part Numbers

Sight Tube Material	Code
FEP Teflon®	FP
Sleeve Tube Material	
Borosilicate Pipe	PI
Heavywall Borosilicate	HW
Flange/Rod Material	
Carbon Steel	CS
316 SS	S6
304 SS	S4

Size, in.	Code
1.00	10
1.25	12
1.50	15
1.63	16
2.00	20
2.75	27
3.00	30
4.00	40
6.00	60
8.00	80

Teflon is a registered trademark of E. I. Dupont

Adaptive Industrial Solutions
sales@adaptiveind.com | (877) 818-5009